ZHEJIANG CHINT ELECTRICS CO., LTD.
Add : No.1 Chint Road, Chint Industrial Park, North
Baixiang Town, LeQing, Zhejiang
Tel : +86-577-62877777 http : //www.chint.net
Fax : +86-577-62875888 E-mail : chint@chint.com

Fake Product Complaint: +86-577-62789987
Product Quality Complaint: 800-8577777 400-8177777
Publish Date:2018.03

CHINT ELECTRIC

Instruction Manual

Before install or operate the product,Please read the Operation Instruction carefully,and keep it for use and standby

NJR2-ZX Series Soft Starter

ISO9001
ISO14001
OHSAS18001

Contents

Foreword.....1
Chapter 1 Preparatory work before using.....3
1.1. Open package inspection.....3
1.2. Model description of soft starter.....3
1.3. Appearance description.....3
Chapter 2 Installation and wiring.....4
2.1. Overall dimension of soft starter.....4
2.2. Installation 5
2.3. Wiring 6
Chapter 3 Operation 11
3.1. Panel operation 11
3.2. Inspection before running.....14
3.3. Method of trial run.....14
3.4. Table of function parameters.....15
3.5. Function definition and description.....16
Chapter 4 Protection and fault diagnosis.....22
4.1. Protection functions.....22
4.2.Table of protection information displayed 24
4.3. Fault diagnosis table.....25
Chapter 5 485 communication 26
Chapter 6 Scope of application 27
Chapter 7 Maintenance.....28
7.1. Maintenance.....28
7.2. Maintenance 28
7.3. Warranty.....28
Chapter 8 Application drawings.....29
Appendix A Configuration table of peripheral devices.....30

Foreword

NJR2-ZX is on-line soft starter without the bypass contactor . Through controlling the conductive angle of three-phase anti-parallel thyristor that is connected in series between power supply and the controlled motor, NJR2 series soft starter make the terminal voltage of motor rise to the rated voltage from the preset value, after starting, thyrister conduction,realize the online operation,without haring to bypass contactor. it belongs tothe category of reduced-voltage starting. Hence, starting torque would be reduced somewhat, it is suitable for locations where are not strict with starting torque. In order to obtain the optimum efficiency of NJR2 series soft starter, please read the Operating Manual carefully before using. Considering your safety and reasonable operation, please read and implement the contents with warning sign "⚠" in the manual carefully. If there were any question during operation, please contact our company, our professional staff would be at your service.

Contents in this Operating Manual are subject to change or modification due to technical reasons, we reserve the power of modifying this Operating Manual.

⚠ Attentions for safety

- ◆ Only professional staff is allowed to install this soft starter.
- ◆ Before operating any live part, you must turn off the power supplies of main circuits R, S and T as well as power supply of control circuit first;
- ◆ Before loading, make sure that the data of F19 is in accordance with the rated current on nameplate of motor;
- ◆ When installing the external live conductors, please take insulating measures for bare parts of conductors, preventing accident electric shock;
- ◆ When the product uses external-control terminal two-wire system and is set with function of automatic restart, it would restart when power recovers after power failure or when the faults are eliminated, which would endanger some machines or equipment, please equip it with relevant interlocking circuits to satisfy the safety norms of machine or equipment.
- ◆ The product has accepted strict dielectric test before leaving the factory, in order to prevent accident electric leakage of enclosure, please earth the ground terminal of product reliably, make it in conformity with relevant requirements.
- ◆ Check to see whether the parameter F19 rated current of motor is in accordance with rated current on motor nameplate, if not, please modify it, otherwise, the motor may be damaged.
- ◆ Found in any current state,the built-in fan does not turn ,after the need to eliminate the cause of the built-infan does not turn,stay fan running before starting the soft starter into online running state,or thyristor module will burn out.

Service conditions

Voltage of main power supply: three-phase alternating-current 380V(±15%)

Frequency of main power supply: 50Hz

Applicable motor: three-phase squirrel-cage asynchronous motor

Class of pollution: class 3

Ingress protection: IP20, determine according to the power class

Cooling way: the built-in fan.forced air cooling

Starting frequency: not exceed 10 times per hour.

Shock resistant capability: the shock should be less than 0.5g

Environmental conditions: the capacity should be derated correspondingly when the altitude exceeds 1000m. When it is 1000m above, current should be reduced by 0.5% for every increase of 100m;

Ambient temperature should be in the range of -10℃ ～40℃; when it is 40℃ above, the current should be reduced by 3% for every increase of 1℃.

Relative humidity should not exceed 95% (20℃～65℃);

Favorable ventilation condition, no condensation, no flammable or explosive gas, no conductive dust.

Chapter 1 Preparatory work before using

1.1. Open package inspection

1.1.1 Make sure that the nameplate model is accordant with your order, packing box of each set of soft starter not only contains the product, but also contain a copy of Certificate of Conformity and an Operating Manual.

1.1.2 Examine whether the product is damaged or not in transportation; if there were any damage, please contact the transportation company or supplier immediately.

1.2. Model description of soft starter

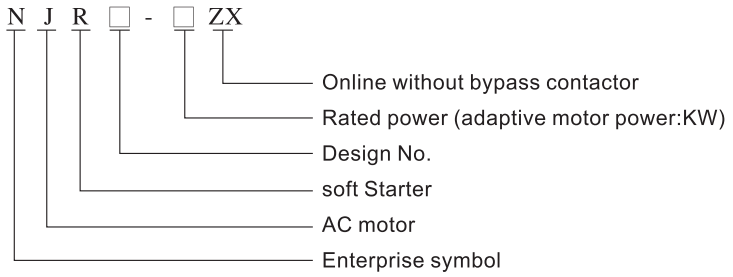

e.g.: NJR2-55ZX is applicable for motor of 55kW.

Description: NJR2-ZX is the basic type without bypass contactor, for products with bypass or other special ordered products, this Operating Manual is only applicable for operations of basic units, control circuits outside the basic units would be specified additionally.

1.3. Appearance description

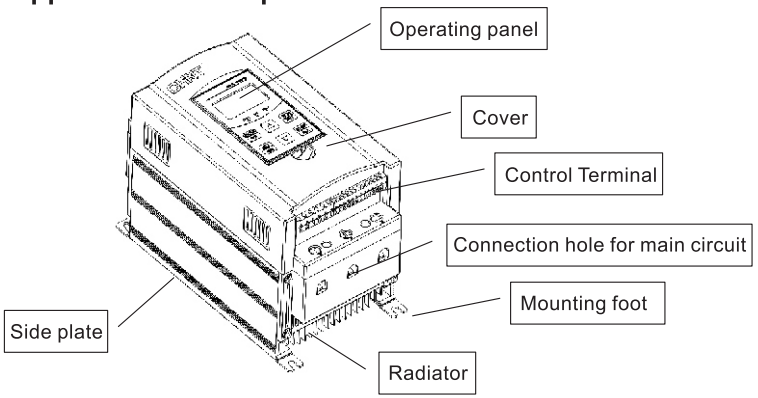

Note: the opening size of the operation panel is 69.2 times 115.2, and the thickness of the mounting plate is less than 2mm.

Fig.1.1 Outside view drawing

Chapter 2 Installation and wiring

2.1. Overall dimension of soft starter

2.1.1 NJR2-7.5ZX~37ZX

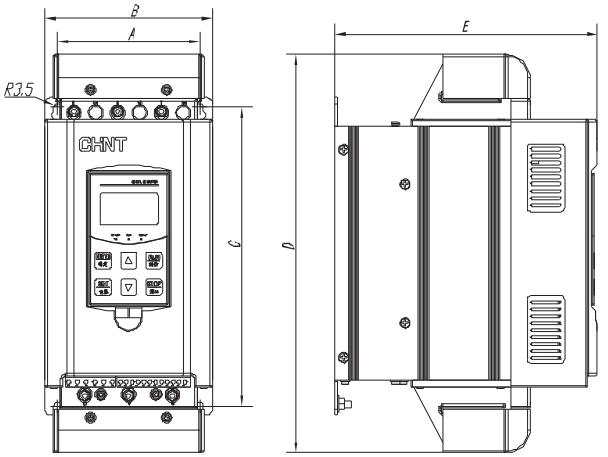

Fig.2.1 Overall dimension diagram of NJR2-7.5ZX～37ZX

2.1.2 NJR2-45XZ~75ZX

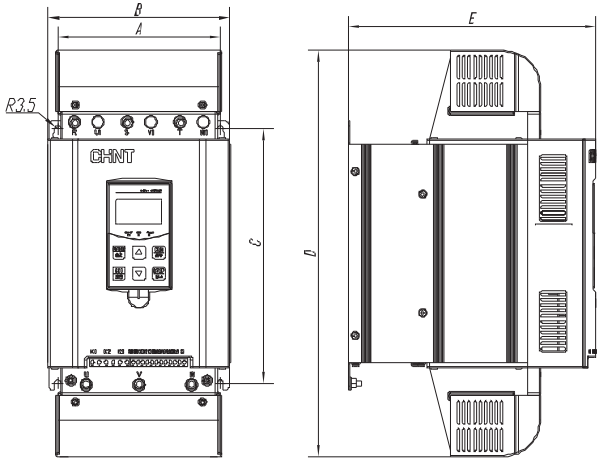

Fig.2.2 Overall dimension diagram of NJR2-45ZX～75ZX

2.1.3 Overall dimensions and specifications

Model	Rated current (A)	Power of controlled motor (kW)	Overall dimension (mm)					Weight (kg)	Remark
			A	B	C	D	E		
NJR2-7.5ZX	15	7.5	123	145	258	345	228	7	Fig2.1
NJR2-11ZX	22	11							
NJR2-15ZX	29	15							
NJR2-18.5ZX	36	18.5							
NJR2-22ZX	42	22							
NJR2-30ZX	57	30							
NJR2-37ZX	70	37							
NJR2-45ZX	84	45	179	200	278	445	273	11	Fig2.2
NJR2-55ZX	103	55							
NJR2-75ZX	140	75							

2.2. Installation

In order to guarantee draughty and good heat dissipation conditions during operation, the soft starter should be installed vertically, and reserve enough space for heat dissipation around the equipment.

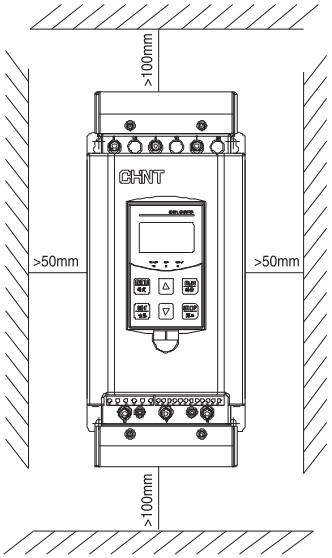

Fig.2.3 Install outer space

2.3. Wiring

2.3.1 Diagrammatic drawing of basic wiring



Fig.2.4 Diagrammatic drawing of basic wiring

2.3.2 Schematic diagram of basic wiring

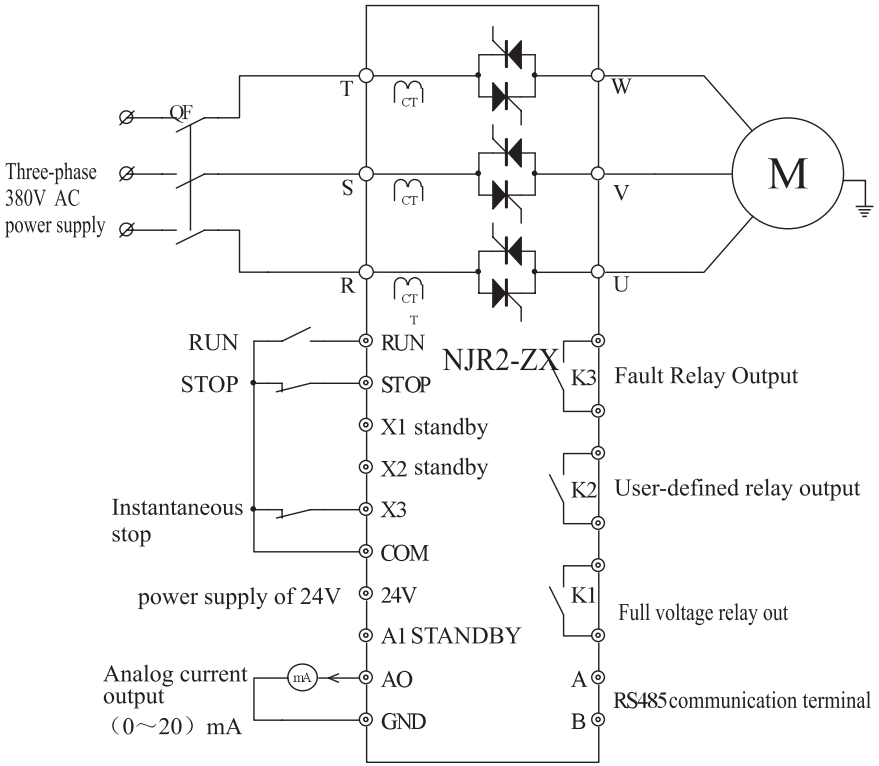

Fig.2.5 Schematic diagram of basic wiring

Note: (1) K3 fault relay is normally closed under the power off state of soft starter, is normally opened after power on if there are no faults, and is closed if there are faults;

(2) When it is controlled by external terminal, it would start the soft starter only when it detects that the signal of terminal RUN is turned from open to close after power on.

2.3.2.1 Definition of main circuit terminal

R、S、T	Input terminal of three-phase AC power supply
U、V、W	Sofe storter outport termina is connected to metot

2.3.2.2 Definition of control terminal

Switching value	Terminal code	Function	Description
Input	RUN	Running terminal	It is able to carry out two-wire and three-wire control together with terminal COM, refer to the two-wire system and three-wire system in function F13 in page 22 for detailed connection methods.
	STOP	Stop/reset terminal	
	X1、X2	Standby	
	X3	Instantaneous stop terminal	It is short-circuit connected with terminal COM when leaving the factory; when this terminal is disconnected, \product will stop output, and send out fault signal of "open-circuit of instantaneous terminal".
	COM	Common terminal of switching value	
Power supply	24V	Power supply of 24V	Output power supply of 24V/50mA to terminal COM
Analog quantity	AO	Analog output	（0~20）mA output 4 times of rated current corresponds to output 20mA
	A1	Standby	
	GND	Common terminal of analog quantity	
Relay output	K1	Full voltage relay	Control the bypass contactor, contact capacity is 5A 250VAC
	K2	Programmable relay	Output function of this relay will be codetermined by F17 and F04.
	K3	Fault relay	When there is failure of the relay
Communication interface	A、B	RS485 communication port	The relay works when there is fault

Note: Power supply output of 24V may have a certain degree of error, please make sure that whether the voltage value meets your requirements or not before using, terminal COM is 24V earthed, it can not be short-circuit connected with terminal GND!Default value of AO analog output is (0~20)mA.

⚠ In addition to the terminal K1 K2 K3,other terminals is can external power supply, otherwise may cause damage of circu it board.

2.3.3 Wiring description

2.3.3.1 Wiring of main circuit :

1）Cables (copper bars) and torsional force for main circuit should be in accordance with relevant standards, refer to the appendix A for recommended values;

2）Don't connect the power factor correction circuit to the terminal of motor that is controlled by the soft starter;

3）Soft starter must be earthed to meet relevant norms on electric leakage. If there are several soft starters wired on the same line during installation, then each soft starter must be earthed separately, it can be equipped with an incoming reactor if it is necessary;

4）When the installation standard requires an incoming leakage equipment for protection, must use a residual current circuit breaker to protect against accident tripping during power on. Check its compatibility with other protective devices;

5）Don't control the run or stop of soft starter by turning on/off the power supply of main circuit. Please wait until the soft starter is electrified, use the control terminals on soft starter or keys RUN and STOP on keyboard panel to control its run and stop;

6） When the direction of rotation is wrong, just interchange the connection of any two phases of U, V and W;

7） It is recommended to use output reactor when the wiring length between soft starter and motor exceeds 50m;

8） Power cable should be isolated from weak-current signal (detector, PLC, measuring instrument) circuit.

2.3.3.2 Wiring of control circuit

1）Max connecting capacity of control terminal; 2.5mm^2; max fastening torque: 0.4N.m;

2）Control wire should be isolated from the power cable;

3）Refer to the wiring diagrams of two-wire system and three-wire system in function F13 in page 22 for wiring of RUN and STOP;

4）The motor would restart if there were run command during power on or fault manual reset;

5）Don't input external power supply to terminals except K1, K2 and K3.

6）When K1, K2 and K3 control the external contactor, it's better to connect a resistance-capacitance circuit on the two ends of contactor coil, to suppress to surge voltage caused by contactor effectively. See the diagram as follows:

2.3.4 Working principle of soft starter

Main circuit of NJR2-ZX series soft starter adopts six anti-parallel connected thyristors to connect with stator circuit of AC motor in series, it makes use of electronic switch of thyristor, controls the change of trigger angle with MPU to change the conductive angle of thyristors, then to control the magnitude of input voltage of motor, finally to control the soft starting of motor. When finishing the start, output of soft starter reaches the rated voltage, makes the three-phase bypass contactor KM attract, put the motor into operation in power grid.

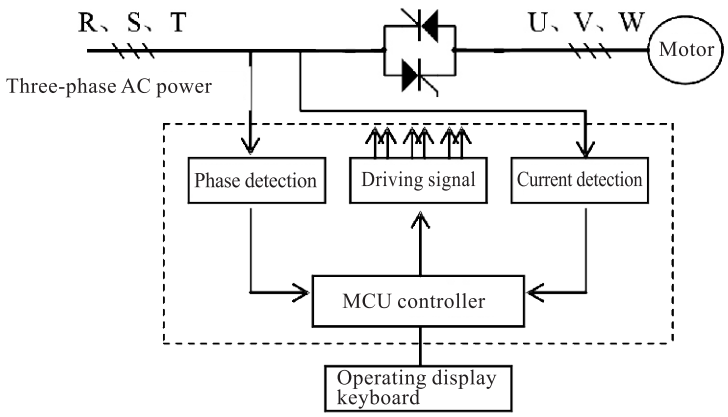

Fig.2.6 Working principle of soft starter

Chapter 3 Operation

3.1. Panel operation

3.1.1 Functional schematic diagram of operating panel, see fig.3.1:

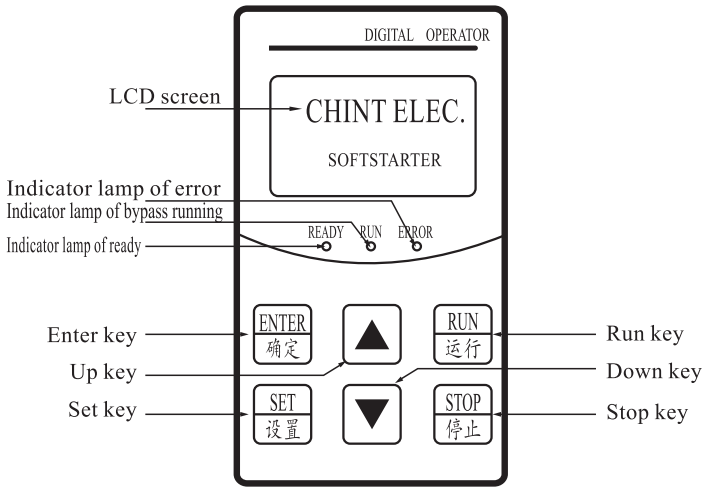

Fig.3.1 Schematic diagram of operating panel

3.1.2 Functions of each key as follows:

Run key: used to start running.

Stop key: used to stop running, and fault reset.

Set key: used to enter into the selection of functional parameter group and data modification.

Up/down: used to increase or reduce the parameter that is needed to be modified.

Enter key: used to store the data after modification, as well as enter into information (such as machine type, fault and so on) check and exit.

⚠ **Push down this key, then power on, it is able to let the set parameters recover to default values**

Notice: there should have a cue tone when pressing the keys, otherwise, pressing of this key is ineffective at this time;

Keyboard panel can be taken off, lead wire distance does not exceed 2m. Users could pay charge for it additionally if it is needed when placing the order, and we would equip it for you.

3.1.3 Parameter setting

3.1.3.1 Modification of set parameters

Note: modification of parameters can only be carried out in standby or bypass state.

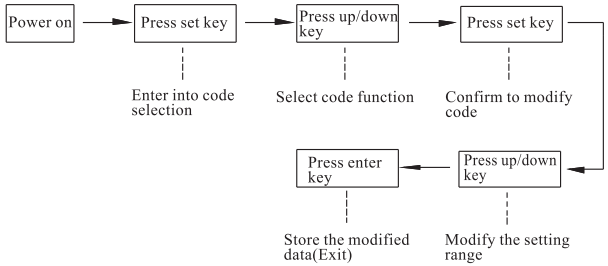

Illustration:

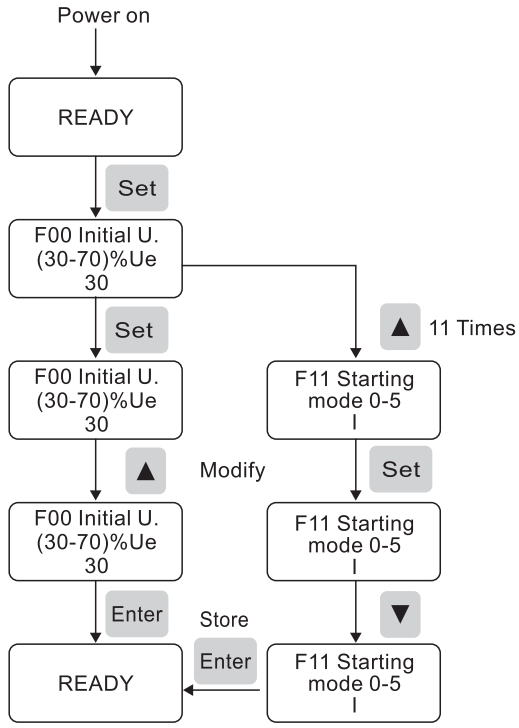

It would exit the setting state automatically if there is no key operation for 2min under setting state;

3.1.3.2 Information check for machine type, fault and others

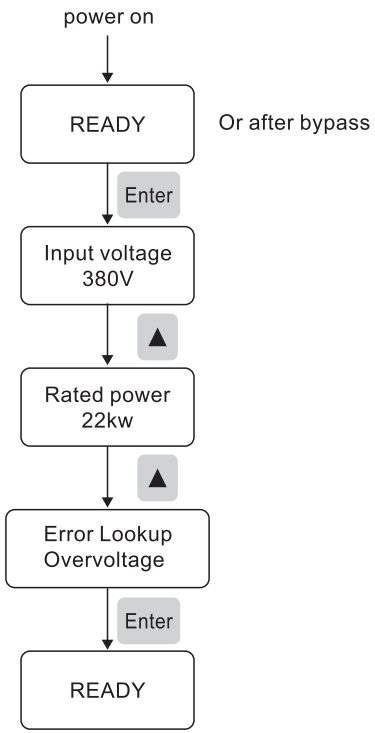

Table of machine type and fault information (parameters are inalterable)

Contents displayed	Description
Input voltage: 380V	Used to monitor the voltage of three-phase AC power supply
Rated power: 22kW	Specification of this soft starter is 22kW
Error lookup--1 Over voltage	The latest fault information, it means that the latest fault is over-voltage
Error lookup--2 No Information	It means no fault
Error lookup--3 No Information	It means no fault
Error lookup--4 No Information	It means no fault
Error lookup--5 No Information	It means no fault
Error lookup--6 No Information	It means no fault
Versron V3.5	Software edition No. of soft starter
The current time	_year_moth_day_hour_minutes_seconds

3.2. Inspection before running

3.2.1 Check the following items carefully before power on:

1）Make sure that the wiring is correct, especially the wiring of input and output terminals should be right, and the earthing terminal has been well earthed;
2）Make sure that there is no short-circuit or to-earth short-circuit situation among terminals or bare live parts.

3.2.2 Notices after power on:

1）After power on, the keyboard panel should display "Chint Electrics Motor Soft Starter", then display "Get Ready";
2）⚠Check to see whether the parameter F19 rated current of motor is in accordance with rated current on motor nameplate, if not, please modify it, otherwise, the motor may be damaged.

3.3. Method of trial run

1）Make sure that there is no abnormal situation, then carry out trial run, default setting is keyboard starting mode when leaving the factory;
2）Make sure that the starting direction of motor is in accordance with the requirements;
3）Starting of motor is not ideal enough, it can be improved by changing the parameters of F00 initial voltage, F06 current-limiting value, F11 starting mode, etc.;
4）Whether the rotation of motor is smooth (no vibration or whistle).

Notice:

1、when the running of soft starter or motor comes across abnormity, or displays faults, please stop running immediately, and check out the cause according to the actual fault situation;

2、When the ambient temperature of site is lower than -10℃, please electrify and preheat for more than 30min first before starting.

3.4. Table of function parameters

Function code	Function name	Setting range	Default value	Description
F00	Initial U.	(30-70)%	30	Effective at F11=1
F01	Up Time	(2-60)s	16	Acceleration time of soft starting, not equal to the total time of soft starting
F02	Down Time	(0-60)s	0	It means free stop when it is set at 0
F03	Start Detay	(0-999)s	0	When receiving the running command, begin to start after a time delay of F03
F04	Program Delay	(0-999)s	0	Operating time delay value of user-defined relay (K2) -in
F05	Interval Delay	(0-999)s	0	For supporting F14
F06	Start Limit I.	(50-500)%Ie Or (1-6000)A (1-6000)A	400	Effective for current relevant modes
F07	Over L. Value	(50-100)%Ie Or (1-6000)A	100	For regulation of overload protection of motor
F08	Display I.Mode	0-3	1	For setting selection of current value or percentage
F09	Under U.Value	(60-90)%	80	Carry out protection when it is lower than the set value
F10	Over U.Value	(100-150)%	120	Carry out protection when it is higher than the set value
F11	Start Mode	0-5	1	0: current limiting; 1: voltage; 2: jump + current limiting; 3: jump + voltage; 4: current ramp; 5: double closed loop
F12	OverL.Class	0-4	2	0: class 2; 1: class 10A; 2: class 10; 3: class 20; 4: class 30
F13	OPT.Mode	0-7	0	For setting selection of panel, external control terminal, etc
F14	Restart SEL.	0-9	0	0: forbidden; 1-9: times of automatic restarting
F15	PARA.Enable	0-1	1	0: unallowable; 1: permissible
F16	COM.Address	0-64	0	For communication between multi soft starters and host
F17	K2.Program	0-7	2	Output (3-4) setting of K2 relay
F18	Stop Limit I.	(20-100)%	100	For current limiting setting of F02 at soft stop
F19	Motor Rated I.	(4-100)%	44	It means that the rated current of matched motor of starter is 44A

3.5. Function definition and description

F00 Initial U. Settable range: (30-70)%Ue. It is effective when the F11 starting mode is set as voltage. It is mainly used to set the magnitude of initial moment of force of soft starter, the starting moment of force would be larger if this value becomes larger, while the starting current would be heavier. Usually, it should be regulated larger for heavy loads, in order to produce larger moment of force, and reach the aim of normal starting. When F11 is set as current relevant modes, F00 can not be modified.

F01 Up Time Settable range: (2-60)s. It is used as reference value for setting of voltage ramp rising time, detailed time depends on the load weight, the product would detect and judge the switching time automatically. Switching time of other starting modes so does.

F02 Down Time Settable range: (0-60)s. It is free stop when it is set at 0, i.e. it would disconnect the bypass contactor immediately once there is stop signal, meanwhile, the product has no output voltage.

It is set as free stop when the product leaves the factory, it is recommended to use this mode for general equipment.

When this parameter is set as a certain time,And the soft starter receives stop sign al, then apply a voltage to motor through regulating thyristor, let it decelerate according to the ramp gradually, preventing quick stop, this type of stopping mode enables it to red uce the water-hammer effect. However, too long soft stop time would lead to current fluct uation. Hence, it is enough to set at 2s~4s for water pumps and so on.

⚠ When the soft starter controls multi motors, this value should be set at "0"

When using soft stop mode, it is able to set the current-limiting value through F18, to reduce the heavy current impulse during soft stop, the current-limiting value is determined by the product of F06 and F18.

F03 Start Delay Settable range: (0-999)s. This function is similar to the timing starting, it counts down according to this set time once receiving the starting command, and starts immediately when it counts down to 0.

F04 Program Delay Settable range: (0-999)s. It is used for F17, it is able to programme the delay time of relay K2, which would operate immediately if it is set at 0.

F05 Interval Delay Settable range: (0-999)s. It is set according to the interval time of F14.

F06 Start Limit I. Settable range: (50-500)%Ie or (1-6000)A. (When F08 is set at 0, 2, this set value displayed would be the current value, but not a percentage). It is used to set the max limiting current of soft starter that bears motor during starting, when the output voltage of soft starter increases, its output current would be kept at this set value until fully started of motor, curve of current and time as follows, thereinto, Ik is the set value of F06.

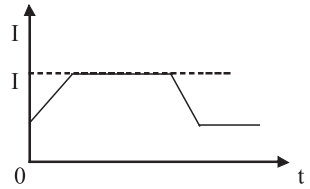

Fig.3.2 currenr-time curve

Notice: when F11 is set at 1, start limiting current can not be modified;

F07 OverL. Value Settable range: (50-100)%Ie or (1-6000)A. (When F08 is set at 0, 2, this set value displayed would be the current value, but not a percentage). This function is applicable for regulation of actual motor overload multiple, e.g. when it is set at 80%, it means that it begins to overload time when the output current of load is larger than 80% of F19. It is suggested that users not modify this parameter (except for special situation).

F08 Display I.Mode Settable range: 0~3. It is used to select the input modes of F06 and F07, and panel display mode during running.

Set value of code F08	0	1	2	3
Display modes of F06 and F07	Current value	Percentage	Current Value	Percentage
Display modes of soft starting, running and soft stopping	Current Value	Current Value	Percentage	Percentage

Notice: 1) When F6 and F7 are percentages, they mean the percentage in motor rated current value of code F19;

2) When F08 is changed, F06 would not be changed correspondingly, please make sure that whether the set value of F06 satisfies the requirement or not.

F09 Under U.Value Settable range: (60-90)%Ue. It is used to set the operating value that is lower than the percentage of rated voltage.

F10 Over U.Value Settable range: (100-150)%Ue. It is used to set the operating value that is higher than the percentage of rated voltage.

F11 Start Mode Settable range: 0: current limiting; 1: voltage; 2: jump + current limiting; 3: jump + voltage; 4: current ramp; 5: double closed loop

This product has six different starting modes that are suitable for various complicated motor and load conditions, users could select according to different application ranges.

1) Current-limiting starting mode

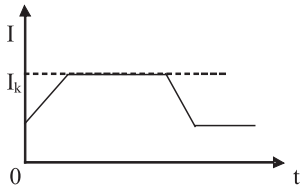

Fig.3.3 currenr-time curve

As shown in above diagram, Ik represents the starting current-limiting value of F06 that has been set, when the motor starts, the output voltage will increase fast until the motor current reaches the set value Ik, and the motor current is kept to be lower than this value, then, as the output voltage rises gradually, the motor speeds up step by step, when the motor reaches the rated speed, the thyristor full couductron to realize full voltag output, the output current will fall quickly to the motor rated current Ie or below, the starting is finished.

When the motor load is quite light or the current-limiting value that has been set is too high, it is normal if the max current during starting does not reach the current-limiting value. The current-limiting starting mode is usually applied to the locations where have high requirements on the starting current.

2) Voltage ramp starting

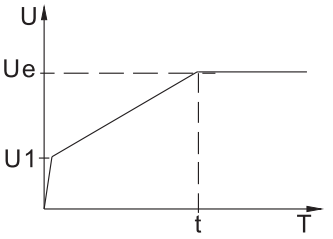

Fig.3.4 currenr-time curve

The above diagram shows the output voltage waveform of voltage ramp starting. Thereinto, U1 represents the initial voltage value during starting, when the motor starts, while the motor current doesn't exceed 400% of rated value, the output voltage of soft starter will rise quickly to U1, then, the output voltage will rise gradually according to the set starting parameter, and the motor will speed up steadily along with the rising of voltage, when the voltage reaches the rated value Ue, the motor reaches the rated speed, and the thyristor full conduction to realize full voltage output, thus, the starting process is finished.

Starting time t can be regulated according to the load magnitude, but not mechanically controlled. When the load is light, the staring time is usually less than the set value. Generally speaking, the voltage ramp starting mode is suitable for the locations that have high requirements on starting stability, but are not strict on starting current.

3) Jump +current limiting starting/jump+voltage starting

The diagram below shows the output variation waveform of jump starting mode. In some heavy-duty occasions, this starting mode may be used when the motor is failed to be started due to effect of mechanical static friction force. When starting, a high fixed voltage can be applied to motor and kept for some time to overcome the static friction force of motor load and drive the motor to rotate, then start in a current-limiting way or voltage ramp way.

Before using this mode, please start the motor with non-jump mode first, only when the motor is failed to rotate due to too large static friction force, that this mode can be used, otherwise, you'd better not use this mode, so as to reduce the unnecessary heavy current impulse.

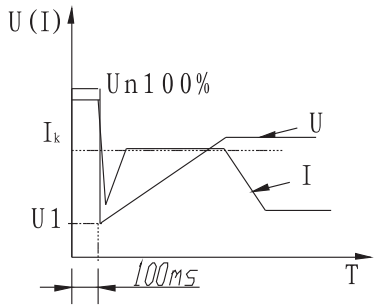

Fig.3.5 Jump + current limiting starting

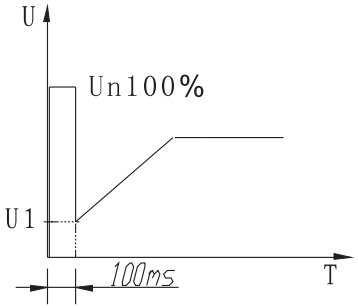

Fig.3.6 Jump + voltage starting

4) Current ramp

The diagram below shows the output current waveform of current ramp starting mode, thereinto, Ik represents the current-limiting value of F06.

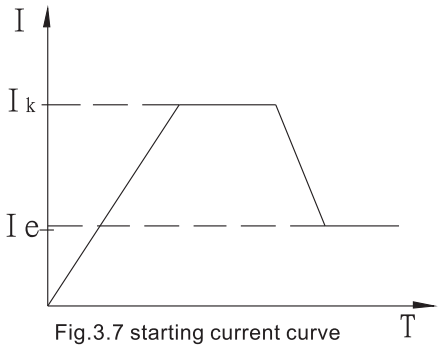

Fig.3.7 starting current curve

The current ramp starting mode has strong acceleration capability, is applicable for two-pole motor, it also is able to shorten the starting time in a certain range.

5) Voltage current-limiting double-closed-loop starting

Voltage current-limiting double-closed-loop starting mode adopts voltage ramp and current-limiting double-closed-loop control, is a comprehensive starting mode requires both smooth starting and strict current-limiting, it adopts pre-estimation method for evaluating the motor working state.

The output voltage waveform of this starting mode will change along with the variation of motor and load condition.

F12 Over L. Class Settable range: 0: class 2; 1: class 10A; 2: class 10 (standard application); 3: class 20 (for heavy duty); 4: class 30 (for super heavy duty), set the thermal-overload protection class of soft starter to motor. Refer to Fig.4.1 Overload protection in page 27 for detailed curve.

⚠ When setting, please set according to the thermal-overload capacity of actually used motor, thermal protection of motor must be in accordance with corresponding protection class, when it is set at 4 (for super heavy duty), please make sure that both motor and soft starter are in cold state, then start.

F13 OPT.Mode Settable range 0~7. It is used to select the control mode of soft starting, detailed configuration as follows:

Value of code F13	0	1	2	3	4	5	6	7
Keyboard control	Permissible	Permissible			Permissible	Permissible		
External terminal control		Permissible	Permissible	Permissible	Permissible			
Communication				Permissible	Permissible	Permissible	Permissible	

Note: 1) When it is set at 1 and 4, only when the external control terminals RUN, STOP and COM are closed that it can be controlled by keyboard;

2) If accident stop is not allowed after starting, or accident start is not allowed when maintaining, just set the code F13 at 7, i.e. all start or stop operation is forbidden.

When external control terminal is permissible, there are two-wire control mode and three-wire control mode, see following diagram for detailed wiring:

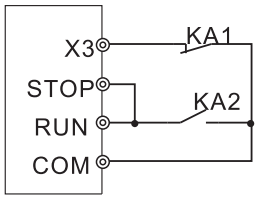

a) Two-wire control

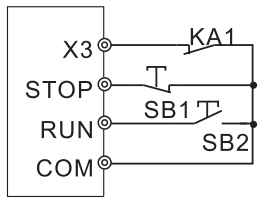

b) Three-wire control

Two-wire control: wire according to Fig. a), when KA1 is in NC state, it runs when KA2 closes, stops when KA2 opens, and instantaneous stops when KA1 is opened.

Three-wire control: wire according to Fig. b), when KA1 is in NC state, it runs when pushing down SB2 (impulse signal), stops when pushing down SB1 (impulse signal), and instantaneous stops when KA1 is opened.

F14 Restart SEL Settable range 0~9. It is used to set the automatic restart times, when it is set at 0, automatic restarting is ineffective;

This function is effective only for external control two-wire mode, it restarts after a ti me delay of 60s after power on or fault elimination (when the set value of F05 is larger th an 60s, then it delays according to F05).

After setting of this function parameter, it would be effective only after re-power on!

⚠ This soft starter equipment for the loss of pressure protection function ,namely the p ower and call, no matter what is external control terminal position of not starting by onese lf, so as not to cause injury. But when the automatic restart function allows losing electrici ty protection function failure.

F15 PARA.Enable It can be set at 0 and 1. When it is set at 0, all other parameters except F15 are forbidden to be modified; when it is set at 1, all parameters can be modified except for F00 and F06 that would be specially treated.

F16 COM.Address Settable range 0~64. Address setting when the host computer controls multi soft starters.

F17 K2.Program Settable range 0~7. It is used to set the operating time of programmable output relay (K2), time delay is available by regulating F04.

Value of code F17	0	1	2	3	4	5	6	7
Operating time of K2 relay	Send out starting command	Begin to start	online runtime	Stop	When stop is finished	Instantaneous stop	Come across faults	Automatic restarting is finished

F18 Stop Limit I. Settable range (20-100)%. This soft stop current limiting value is the percentage of F06 start current limiting value.

e.g. F06 is set at 400, F18 is set a 60, then the soft stop current limiting multiple is 400%×60%=2.4 times of rated current.

F19 Motor Rated I. Settable range (4-1000)A. It is used to set the rated current of motor of soft starter, its range is (50-200)% of power (unit: kW) of rated machine type. If the power of rated machine type of your purchased soft starter is 22kW, then setting range of F19 is (11-44)A. When the actual operating current of motor is lower than 25% of original value of F19, sensitivity error for tripping operation protection would be increased.

⚠ After initialized, this value would become 2 times of power value, over-current and overload of soft starting would be treated according to this value, considering normal and reliable protection of your motor system, please set this value according to the nameplate of the motor, in order to get an optimum protection state, if the set value is not in conformity with the nameplate of motor, the motor may be burnt.

Chapter 4 Protection and fault diagnosis

4.1. Protection functions

NJR2 series soft starter has perfect protection functions, guarantee safety using of soft starters and motors. During operating, please set the protection classes and protection parameters properly according to actual situations.

1）Overheat protection of soft starter: carry out protection when the temperature reaches 75℃, and the overheat protection would be released when the temperature falls to about 65℃ (difference temperature of temperature controlled switch).

2）Input open-phase protection: when there is input open-phase, the product would carry out protection against input open-phase, protective lag time<3s.

3）Output open-phase protection: when there is output open-phase, the product would carry out protection against output open-phase, protective lag time <3s.

4）Three-phase unbalance protection: when current deviation of each phase is rather large, the product would carry out protection against three-phase unbalance, protective lag time <3s.

5）Load short-circuit protection: when the output current is larger than 10 times of rated current of motor, the product would carry out protection against load short-circuit, protective lag time<20ms.

6）Over-voltage or under-voltage protection: the product would carry out protection when the source voltage is higher than the set value of F10 or lower than the set value of F09, protective operation time <3s.

7）Start current-limiting protection time: when the soft starter starts with motor, while it is larger than 2.75 times of rated current, current-limiting overtime protection will be carried out according to the time in following table.

Table 1 Current-limiting overtime protection time of soft starting

Set value of F12 / Actual Current	0:2 Class	1:10 A Class	2 :10 Class	3 :20 Class	4:30 Class
4.75Ie≤Ir≤5.0Ie	23	23	23	23	29
4.25Ie≤Ir<4.75Ie	30	30	30	30	36
3.75Ie≤Ir<4.25Ie	35	35	35	35	45
3.25Ie≤Ir<3.75Ie	47	47	47	47	60
2.75Ie≤Ir<3.25Ie	63	63	63	63	80

When it is lower than 2.75 times, and starting time exceeds 65s, the product would carry out protection due to too long of starting time.

Thereinto, Ir represents actual current value, Ie represents rated current of motor

8）Operating overload protection time: take the set value of F07 or F19 as reference According to the IEC60947-4-2 standard curve for inverse time-lag thermal protection, curve of tripping protection time as follows:

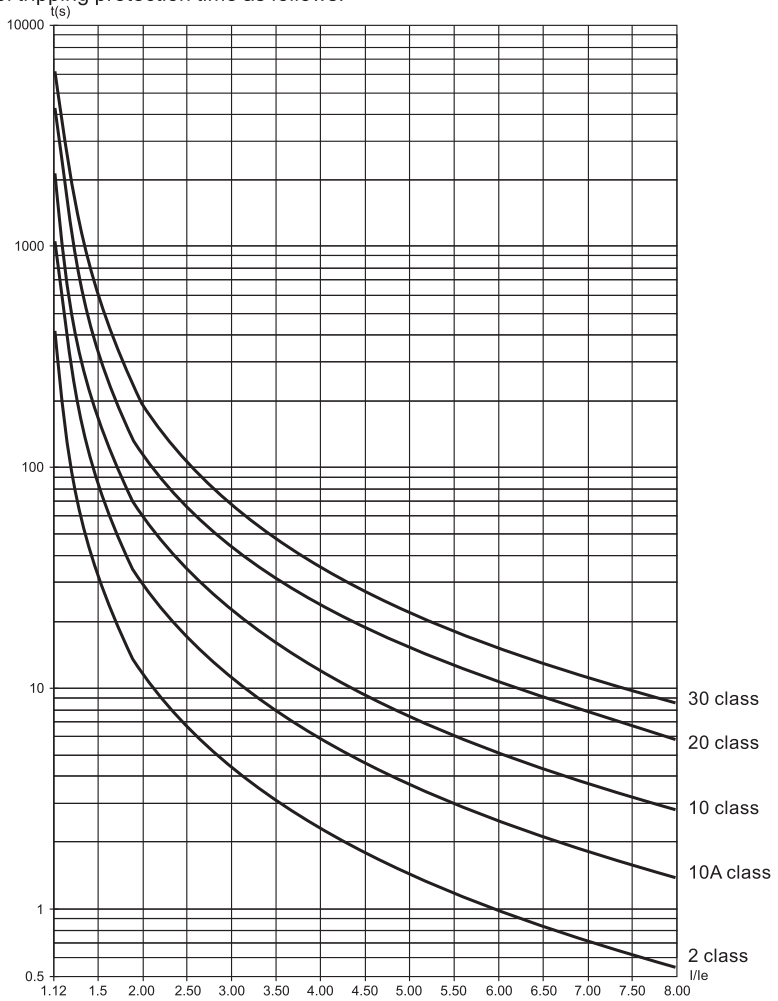

Fig.4.1 Standard thermal-overload protection curve

Tripping time of standard application (class 10)		Tripping time of heavy-duty application (class 20)	
3Ie	5Ie	3.5Ie	5Ie
23s	8s	32s	15s

4.2.Table of protection information displayed

When the soft starting comes across abnormity, protection function would exert its role, and the LCD screen would display the fault name and relevant information, see table 2.

Table 2 Fault information

Panel display	Operating information and treatment
Fault removed	It has under-voltage, over-voltage, overheat or other faults just now, and now the system has recovered, push down the key "STOP" to reset.
X3 terminal open	Check whether X3 and terminal COM has been connected, or check the NC contacts of other protective device that are connected with this terminal
Softstarter over heat	Starting operation is too frequent or the power of motor doesn't fit for the soft starter
Start overtime	The setting of starting parameter is not proper, the load is too heavy or the power capacity is not enough.
Import default phase	Check the connection of three-phase power supply, whether the thyristor has open-circuit, whether the contact of control wire of thyristor is in good condition.
Outport default phase	Check the output circuit and connection wires of motor, whether the thyristor has short-circuit, whether the contact of control wire of thyristor is in good condition If the trans finer,if good contoot.
Three-phase unbalance	Make sure that the input three-phase power supply and load motor are normal, three-phase current transformer has no output signal
Limit current overtime	Check whether the load is too heavy, or the motor power doesn't fit for the soft starter, or setting of overload protection class is too low
Overloading protect	Check whether the load is too heavy, or parameter setting of code F7 is improper.
Under voltage	Check the input source voltage, or parameter setting of code F9 is improper.
Over voltage	Check the input source voltage, or parameter setting of code F10 is improper.
Parameter set error	Amend the setting or press the "ENTER" key to power on and start up, to resume the default values.
Loading short circult	Coil of motor has short-circuit or to-earth short-circuit
Restart connect error	Check the external control starting and stopping terminals to see whether they are connected in two-wire control way
STOP terminal connect error	When the external control way is permitted, the external stop terminal is in the state of open circuit, it would be failed to start up the motor.

4.3. Fault diagnosis table

Abnormal phenomena	Checking contents	Countermeasures
Motor is failed to rotate	1. Check the wiring;; 2. Check whether the power line has been connected with input terminals (R, S, T).	1. Make sure that the wiring is correct; 2. Confirm the power supply of input terminal.
	Check whether the keyboard has abnormal display	Please refer to table 2
	Check whether the motor is locked (whether the load is too heavy)	Please cancel the locking of motor (reduce load)
It is failed to control the start and stop with keyboard	1. Check whether the terminals X3 and COM have open-circuit; 2. Check whether the setting of code F13 is correct.	1. Short-circuit connect the X3 and COM; 2. Set the code F13 correctly;
It is failed to start with external control	Check whether the code F13 has been set into external control	Set it into external control, adopt the wiring method of F13
Motor is able to rotate, but the speed keeps unchanged	Check whether the load is too heavy	Please reduce load ; Amplify the initial voltage or current-limiting value
Starting time is too long	1. Load is too heavy; 2. Code has not been well set; 3. Check whether the motor specification is proper.	1. Please reduce load 2. Set F00, F01 and F06; 3. Check the specification sheet and nameplate, makes sure that they are in conformity with F19.
Suddenly stop during running	Check the external input terminal	Check terminals X3 and COM to see if their connection is loosened; Please check the NC of external protector to see whether it is able to work normally; Check the connection of external stop button to see if it is loosened.

Chapter 5 485 communication

This product carries out communication with computer or PLC through port 485, the host is able to control the run/stop of soft starter through command, monitor its running state and modify its functional data, etc. Through the 485 communication of soft starter, it is able to remote operate, input operating command, manage the running state, one-time read-in function code and data for multi soft starters through the computer, it saves labor when carrying out function input.

Main functions:

1. Input of command of stop running
2. Monitoring of running state
3. Real-time tracking (tabular display of running information)
4. One-time read, read-in and save to document and so on of function code.

Note: communication software, communication cables and the detailed communication operating manual are options, please give clear indication when placing the order if needed.

Chapter 6 Scope of application

NJR2-ZX series soft starter meet the requirements of most of the electric heavy-duty loads, the following table is for reference only

Load type	Start ramp time (s)	Stop ramp time (s)	Initial voltage	Voltage starting (max current-limiting value)	Current-limiting starting (max current-limiting value)
Centrifuge	16	20	40	4	2.5
Ball mill	20	6	60	4	3.5
Fan	26	4	30	4	3.5
Light-duty motor	16	2	30	4	3
Piston compressor	16	4	40	4	3
hoist	6	10	60	4	3.5
Hoisting machine	6	10	60	4	3.5
Pug mill	16	2	50	4	3
Crusher	16	10	50	4	3.5
Screw compressor	16	2	40	4	3
Screw transfer machine	20	10	40	4	2
Belt conveyer	20	10	40	4	2.5
Heat pump	16	20	40	4	3

Chapter 7 Maintenance

7.1. Maintenance

7.1.1 Service environment for the soft starter must be in accordance with the stipulations in Operating Manual;

7.1.2 Try to avoid vibration;

7.1.3 When the soft starter is left unused for long time, it must be electrified once in two years, when electrifying, please use a voltage regulator and let the voltage rise to rated value slowly, electrifying time should be 5h.

7.2. Maintenance

Before maintaining, remember to cut off the power supply first, then it is allowed to carry out maintenance to the soft starter; only professional staff is allowed to disassemble and maintain the product.

7.2.1 Clear away the dust from inner of the machine regularly;

7.2.2 Check the terminals and screws to see if they are loosened;

7.2.3 Check the wires to see if there is any damage or aging;

7.2.4 Check the copper bar and contact part of each conductor to see if there is overheat phenomenon;

7.3. Warranty

7.3.1 Warranty period: 12 months from the date of purchase by the self - employed or 18 months from the date of production. Take the time as the first.

7.3.2 The warranty excludes the following situations although it still is in warranty period:

1). Damages of soft starter caused by operations not in accordance with the Operating Manual;

2). Damages caused by fire, flood, earthquake, voltage abnormity, etc;

3). Damages caused by improper type selection or when the soft starter is used for nonnormal functions.

Chapter 8 Application drawings

8.1. Basic wiring

1.Circuit diagram of basic wiring

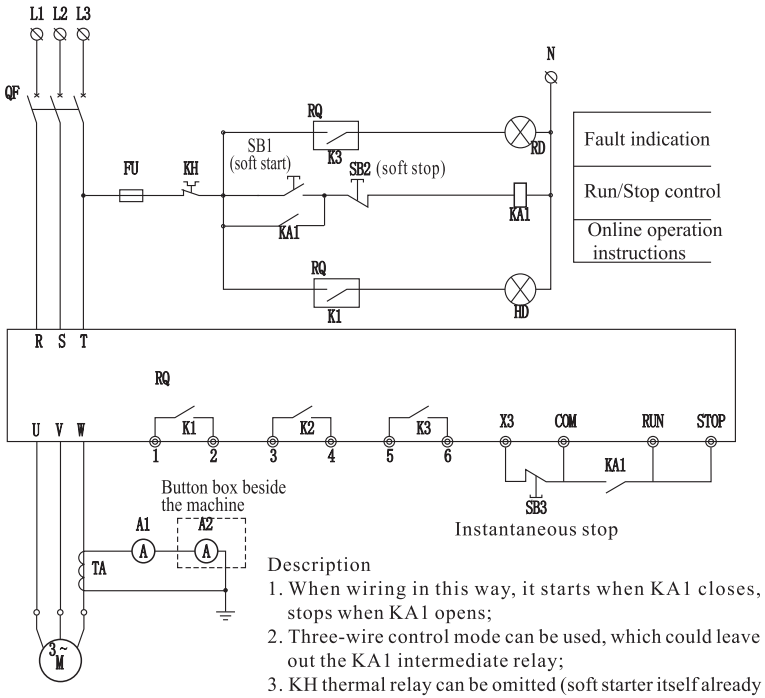

Description

1. When wiring in this way, it starts when KA1 closes, stops when KA1 opens;
2. Three-wire control mode can be used, which could leave out the KA1 intermediate relay;
3. KH thermal relay can be omitted (soft starter itself already has overload protection function);
4. Terminal number accords with the description of control terminals.

Appendix A Configuration table of peripheral devices (recommended)

Peripheral configuration of the product as follows, voltage is AC380V

Motor parameter	Soft starter		Circuit breaker	Cable wire/copper bar
Power(kW)	Rated Current (A)	Model & spec	Model & spec	Spec. of copper conductor (mm^2)
7.5	15	NJR2-7.5ZX	NM1-63/20	4
11	22	NJR2-11ZX	NM1-63/32	6
15	29	NJR2-15ZX	NM1-63/40	10
18.5	36	NJR2-18.5ZX	NM1-63/50	10
22	42	NJR2-22ZX	NM1-63/63	16
30	57	NJR2-30ZX	NM1-100/80	25
37	70	NJR2-37ZX	NM1-100/100	35
45	84	NJR2-45ZX	NM1-225/125	35
55	103	NJR2-55ZX	NM1-225/160	35
75	140	NJR2-75ZX	NM1-225/200	50