

NHRT40 Vertical Fuse-switch Disconnector

1. General

1.1 Application
NHRT40 series vertical fuse-switch disconnector is applicable in the circuit of rated voltage AC690V and below, rated current AC 160A-630A, rated frequency of 50Hz.
NHRT40 series are infrequently manually operated multipolar fuse combination switches. They break or switch off on load and provide safely isolation and protection against overcurrent for any voltage electrical circuit.

1.2 Standard: IEC 60947-3.

2. Type designation

NHRT 40 - □ / □ □ □ □

- B:Means foundation bed
- N:Means new type(different connection mode)
- L: Three phases breaking and making simultaneously; Blank: independent operation phase to phase
- No. of poles
- Conventional thermal current
- Series No.

3. Structure and features

3.1 Structure: The switch is consisted of underpan, base, cover, handle and shield.
3.2 NT series fuse link is installed in the cover to act as knife of active contact.
3.3 The handle moves fan-shapely based on the pivot of underpan, makes the cover and fuse make and break together, it is with enough space and remarkable disconnection point which meets the requirement of disconnector switch.
3.4 It is convenient to dismount the base and underpan, which is easy to mount the base to the busbar safely and reliably.
3.5 There is arc extinguisher on the underpan, which ensures breaking capacity of the switch.

4. Technical data

Conventional thermal current (A)		160	250	400	630
Rated insulation voltage (V)		800			
Rated current (A)	400V AC20	160	250	400	630
	400V AC21	160	250	400	630
	400V AC22	160	250	400	630
	690V AC20	160	250	400	630
	690V AC21	100	200	315	425
	690V AC22	100	160	315	315
Specification of associated fuse	Model	00	1	2	3
	400V Rated current of fuse (Breaking capactiy) A	20, 25, 32, 35, 40, 50, 63, 80, 100, 125, 160 (≥100kA)	80, 100, 125, 160, 200, 224, 250 (≥100kA)	125, 160, 200, 224, 250, 315, 355, 400 (≥100kA)	315, 355, 400, 425, 500, 630 (≥100kA)
	690V Rated current of fuse (Breaking capactiy) A	20, 25, 32, 35, 40, 50, 63, 80, 100 (≥50kA)	80, 100, 125, 160, 200 (≥50kA)	125, 160, 200, 224, 250, 300, 315 (≥50kA)	315, 355, 400, 425 (≥50kA)

5. Overall and mounting dimensions (mm)

NHRT40-160 Independent operation phase to phase

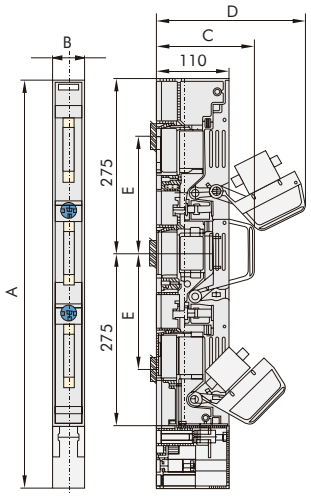

NHRT40-160 Simultaneous operation of three phases

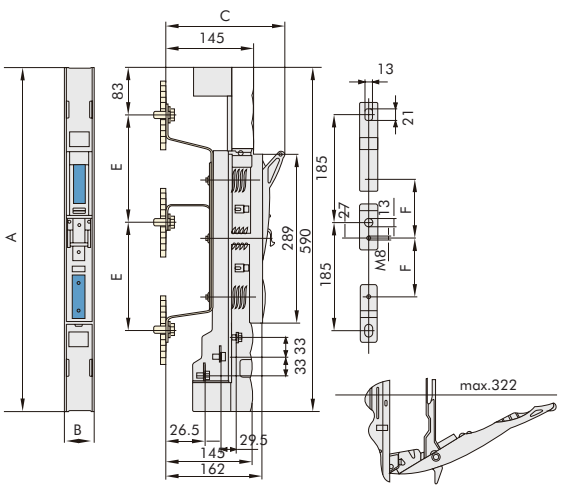

NHRT40-250, 400, 630 Independent operation phase to phase

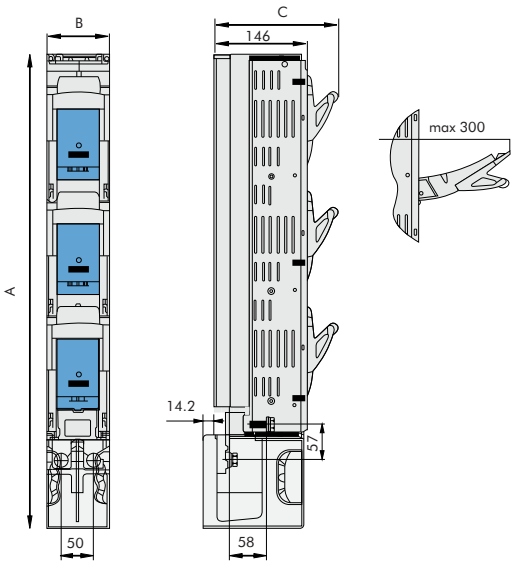

NHRT40-250, 400, 630 Simultaneous operation of three phases

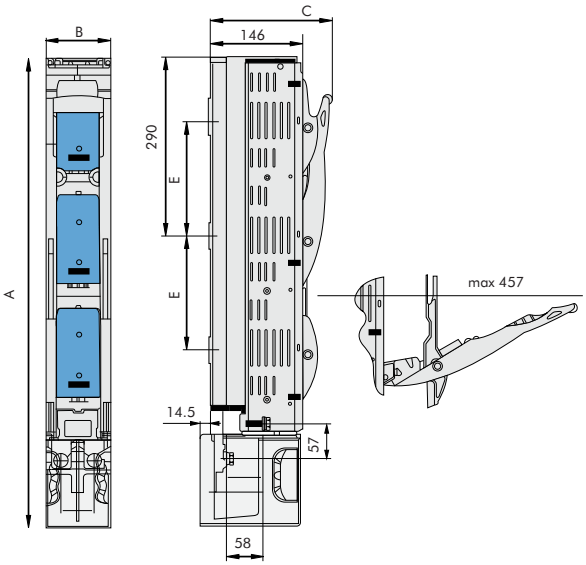

NHRT40-250, 400, 630 Independent operation phase to phase

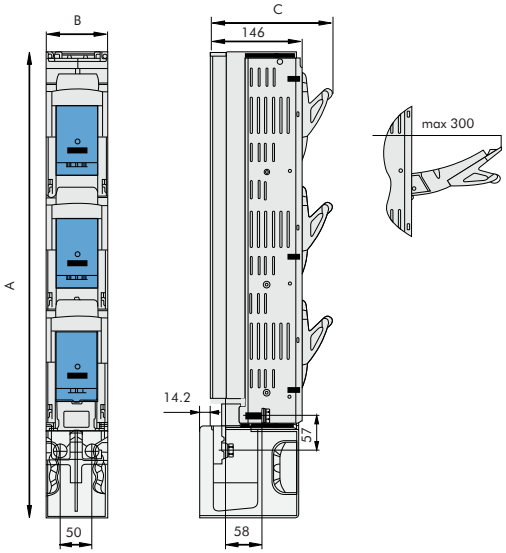

NHRT40-250, 400, 630 Simultaneous operation of three phases

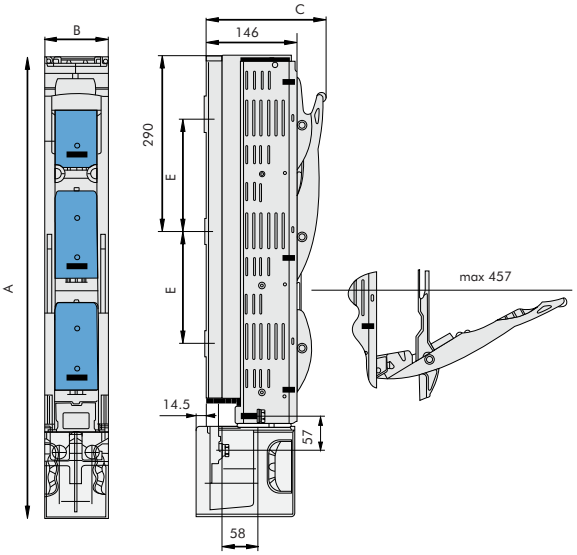

NHRT40-250, 400, 630 Independent operation phase to phase

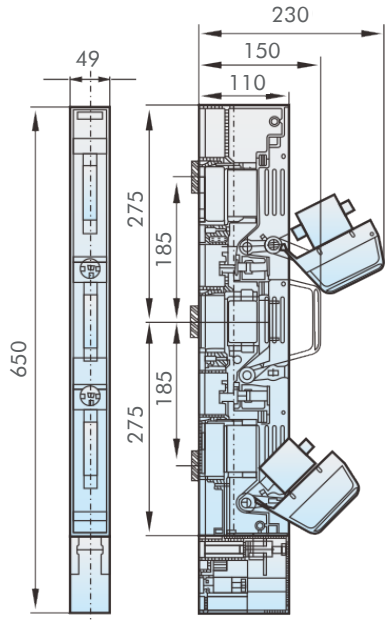

NHRT40-250, 400, 630 Simuitaneous operation of three phases

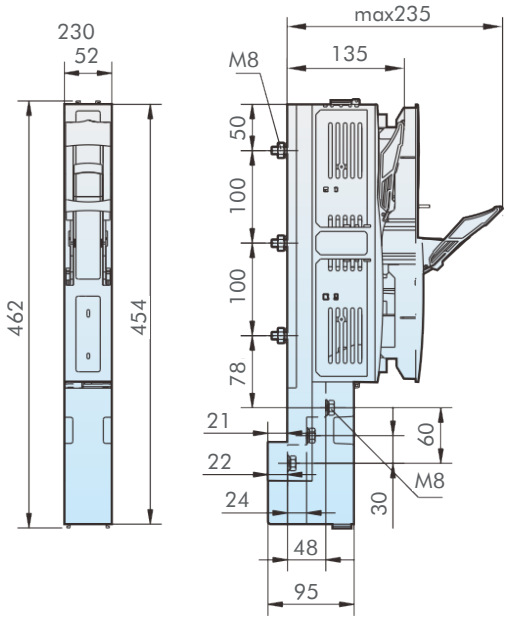

NHRT40-250, 400, 630 Independent operation phase to phase

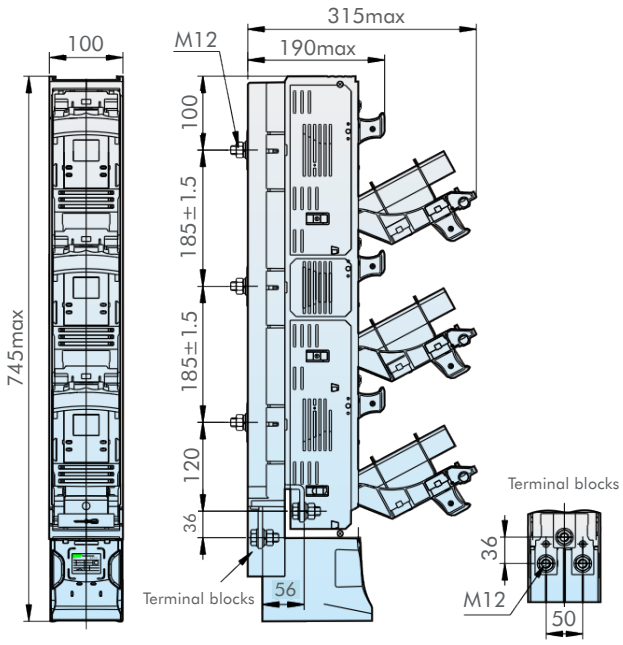

NHRT40-250, 400, 630 Simuitaneous operation of three phases

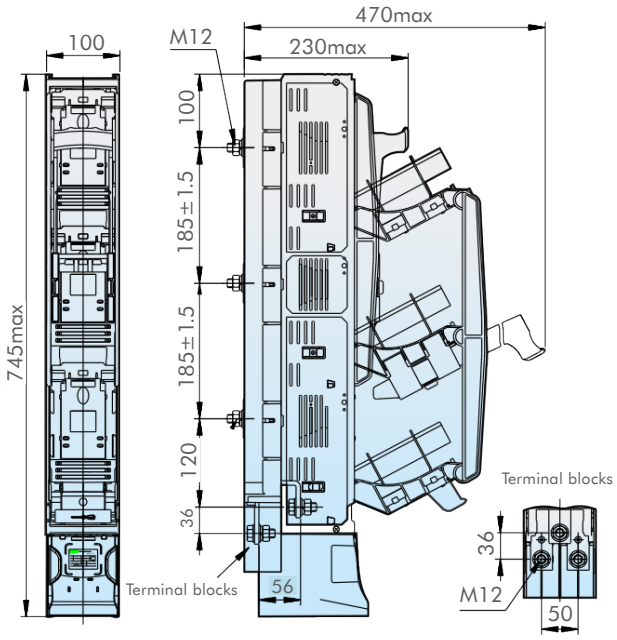

Model	A	B	C	D	E	F
NHRT40-160 Independent operation phase to phase	650	49	150	230	185	
NHRT40-160 Simuitaneous operation of three phases	590	49	198	322	185	100
NHRT40-250, 400, 630 Independent operation phase to phase	764	99	195	300	185	
NHRT40-250, 400, 630 Simuitaneous operation of three phases	764	99	195	457	185	