

NVF7 VFD

1. Product overview

NVF7 series drive adopts open-loop and closed-loop magnetic flux vector control technology, with fast load response, large low-frequency torque, strong overload capacity, etc., to achieve accurate control of the equipment, the series of inverters have stable output, torque limit, speed tracking, simple PLC, process PID and other application functions, can meet the electrical drive needs of wire drawing, textile, machine tools, papermaking, packaging, food, plastic and fan pumps and a variety of automated production equipment.

2. Application scenarios

There are two main types of applicable loads:

- Constant torque type and heavy load.
- Variable torque type and light load.

Applicable equipment of the product



Draught fan | Pump | Air conditioning | Conveyor belt | Food machinery | Packaging machinery

3. Main features

Rated working voltage: three-phase 525~690V,three-phase 380~480V, three-phase 230V,single phase 230V

Power range: Single-phase 230V: 0.4kW~4.0kW; Three-phase 230V: 0.4kW~55kW; Three-phase 380V: 0.4kW~630kW; Three-phase 690V: 3.0kW~560kW

Output frequency range (Hz): 0Hz-500Hz

Control method: Flux vector control (FVC),Sensorless vector control (SVC),V/F control

Frequency resolution:

Digital setting: 0.01Hz; Analog setting: Maximum frequency x 0.5%

Overload capacity: S4（380~480V）:T-type: 150% rated current for 1 min and 180% rated current for :10s

P-type: 120% rated current for 1 min and 150% rated current for :2s

S6（525~690V）: 150% rated current for 1 min and 180% rated current for :2s

Multi speed control: 16 speed control

EMC: Category C3 EMC filter are standard built-in for all range.

DC choke: DC choke is standard built-in for NVF7-18.5T/22P(T5 frame) and above.

4. Environmental conditions

Ambient temperature: (-10~+40) ° C. When using between 40 ° C and 50 ° C, it's necessary to consider derating. The capacity decreases by 1% for every 1 ° C increase in temperature;

Relative humidity: (5-90)% R H;

Storage temperature: -25 ° C ~+55 ° C,

If the altitude is above 1000 meters, please reduce the rating by 1% for every 100m increase, but it cannot exceed 3000m;

Indoor use, places that are not exposed to direct sunlight, dust, corrosive gases, lammable gases, oil mist, water vapor, dripping water, or salt,

5. Type designation

NVF7-	7.5T	/	11P	-	Phases and Input voltage	-	B	1
Series Name	Motor power (KW) T: constant torque/heavy load type 0.4k~560kW		Motor power (KW) P: variable torque/light load type 0.75kW~630kW		S: three phase D: single phase 2: 230V 4:380~480V 6:525~690V		Brake unit: B: built in Empty:no	Operation panel: 1: LCD Empty:LED

6. Selection table and ordering code

Three-phase 690V Drive Model Specification Table

Model (standard built in LED)	Input current A	Output current A	Adapting motor kW	Ordering code
NVF7-3.0T-S6(R)	4.0	4.0	3.0	616173
NVF7-4.0T-S6(R)	5.6	5.6	4.0	616175
NVF7-5.5T-S6(R)	7.4	7.4	5.5	616177
NVF7-7.5T-S6(R)	11	9.9	7.5	616179
NVF7-11T-S6(R)	16	14.3	11	616181
NVF7-15T-S6(R)	21	19	15	616183
NVF7-18.5T-S6(R)	26	23	18.5	616185
NVF7-22T-S6(R)	35	26	22	616187
NVF7-30T-S6(R)	40	35	30	616189
NVF7-37T-S6(R)	47	41	37	616191
NVF7-45T-S6(R)	52	50	45	616193
NVF7-55T-S6(R)	65	62	55	616195
NVF7-75T-S6(R)	85	85	75	616197
NVF7-90T-S6(R)	95	102	90	616199
NVF7-110T-S6(R)	118	125	110	616201
NVF7-132T-S6(R)	145	150	132	616203
NVF7-160T-S6(R)	165	175	160	616205
NVF7-185T-S6(R)	190	200	185	616206
NVF7-200T-S6(R)	210	215	200	616209
NVF7-220T-S6(R)	230	240	220	616211
NVF7-250T-S6(R)	255	271	250	616213
NVF7-280T-S6(R)	286	300	280	616215
NVF7-315T-S6(R)	334	328	315	616217
NVF7-355T-S6(R)	360	380	355	616219
NVF7-400T-S6(R)	411	426	400	616221
NVF7-450T-S6(R)	445	465	450	616223
NVF7-500T-S6(R)	518	540	500	616225
NVF7-560T-S6(R)	578	600	560	616227

Model (standard built in LCD)	Input current A	Output current A	Adapting motor kW	Ordering code
NVF7-3.0T-S6-1(R)	4.0	4.0	3.0	616172
NVF7-4.0T-S6-1(R)	5.6	5.6	4.0	616174
NVF7-5.5T-S6-1(R)	7.4	7.4	5.5	616176
NVF7-7.5T-S6-1(R)	11	9.9	7.5	616178
NVF7-11T-S6-1(R)	16	14.3	11	616180
NVF7-15T-S6-1(R)	21	19	15	616182
NVF7-18.5T-S6-1(R)	26	23	18.5	616184
NVF7-22T-S6-1(R)	35	26	22	616186
NVF7-30T-S6-1(R)	40	35	30	616188
NVF7-37T-S6-1(R)	47	41	37	616190
NVF7-45T-S6-1(R)	52	50	45	616192
NVF7-55T-S6-1(R)	65	62	55	616194
NVF7-75T-S6-1(R)	85	85	75	616196
NVF7-90T-S6-1(R)	95	102	90	616198
NVF7-110T-S6-1(R)	118	125	110	616200
NVF7-132T-S6-1(R)	145	150	132	616202
NVF7-160T-S6-1(R)	165	175	160	616204
NVF7-185T-S6-1(R)	190	200	185	616207
NVF7-200T-S6-1(R)	210	215	200	616208
NVF7-220T-S6-1(R)	230	240	220	616210
NVF7-250T-S6-1(R)	255	271	250	616212
NVF7-280T-S6-1(R)	286	300	280	616214
NVF7-315T-S6-1(R)	334	328	315	616216
NVF7-355T-S6-1(R)	360	380	355	616218
NVF7-400T-S6-1(R)	411	426	400	616220
NVF7-450T-S6-1(R)	445	465	450	616222
NVF7-500T-S6-1(R)	518	540	500	616224
NVF7-560T-S6-1(R)	578	600	560	616226

Three-phase 380V Drive Model Specification Table

Model (standard built in LED)	power supply capacity kVA	Input current A	Heavy load rated current A	Light load rated current A	Motor power kW (Heavy load/light load)	ordering code
NVF7-0.4T/0.75P-S4-B	2	1.8	1.5	2.5	0.4T/0.75P	505309
NVF7-0.75T/1.1P-S4-B	2.8	2.4	2.5	3.1	0.75T/1.1P	505310
NVF7-1.1T/1.5P-S4-B	4.1	3.7	3.1	3.7	1.1T/1.5P	505311
NVF7-1.5T/2.2P-S4-B	3.0	4.6	3.7	5.0	1.5T/2.2P	505312
NVF7-2.2T/3.0P-S4-B	3.0	6.3	5.0	7.2	2.2T/3.0P	505313
NVF7-3.0T/4.0P-S4-B	5.0	6.1	7.2	9.5	3.0T/4.0P	505314
NVF7-4.0T/5.5P-S4-B	5.9	10.5	9.5	12.2	4.0T/5.5P	505315
NVF7-5.5T/7.5P-S4-B	8.6	14.6	12.2	16.2	5.5T/7.5P	505316
NVF7-7.5T/11P-S4-B	13	19	16.2	24.6	7.5T/11P	505317
NVF7-11T/15P-S4-B	18	26	24.6	31.4	11T/15P	505318
NVF7-15T/18.5P-S4-B	25	34	31.4	37	15T/18.5P	505319
NVF7-18.5T/22P-S4-B	29	38.5	37	45	18.5T/22P	505320
NVF7-22T/30P-S4-B	34	46.5	45	60	22T/30P	505321
NVF7-30T/37P-S4 NVF7-30T/37P-S4-B	46	62	60	75	30T/37P	505322、505323
NVF7-37T/45P-S4 NVF7-37T/45P-S4-B	57	76	75	90	37T/45P	505324、505325
NVF7-45T/55P-S4 NVF7-45T/55P-S4-B	69	92	90	110	45T/55P	505326、505327
NVF7-55T/75P-S4 NVF7-55T/75P-S4-B	85	113	110	150	55T/75P	505328、505329
NVF7-75T/90P-S4 NVF7-75T/90P-S4-B	114	157	150	176	75T/90P	505330、505331
NVF7-90T/110P-S4 NVF7-90T/110P-S4-B	133	180	176	210	90T/110P	505332、505333
NVF7-110T/132P-S4 NVF7-110T/132P-S4-B	160	214	210	253	110T/132P	505334、505335
NVF7-132T/160P-S4	195	256	253	300	132T/160P	505336
NVF7-160T/185P-S4	236	307	300	340	160T/185P	505337
NVF7-185T/200P-S4	267	345	340	380	185T/200P	505338
NVF7-200T/220P-S4	305	430	380	420	200T/220P	505339
NVF7-220T/250P-S4	350	477	420	470	220T/250P	505340
NVF7-250T/280P-S4	420	526	470	520	250T/280P	505341
NVF7-280T/315P-S4	450	605	520	600	280T/315P	505342
NVF7-315T/355P-S4	516	647	600	670	315T/355P	595277
NVF7-355T/400P-S4	565	700	670	750	355T/400P	595279
NVF7-400T/450P-S4	630	800	750	810	400T/450P	595281
NVF7-450T/500P-S4	715	865	810	860	450T/500P	595283
NVF7-500T/550P-S4	850	1008	860	990	500T/550P	595285
NVF7-560T/630P-S4	902	1160	990	1200	560T/630P	595287

Model (standard built in LCD)	power supply capacity kVA	Input current A	Heavy load rated current A	Light load rated current A	Motor power kW (Heavy load/light load)	ordering code
NVF7-0.4T/0.75P-S4-B1	2	1.8	1.5	2.5	0.4T/0.75P	505343
NVF7-0.75T/1.1P-S4-B1	2.8	2.4	2.5	3.1	0.75T/1.1P	505344
NVF7-1.1T/1.5P-S4-B1	4.1	3.7	3.1	3.7	1.1T/1.5P	505345
NVF7-1.5T/2.2P-S4-B1	3.0	4.6	3.7	5.0	1.5T/2.2P	505346
NVF7-2.2T/3.0P-S4-B1	3.0	6.3	5.0	7.2	2.2T/3.0P	505347
NVF7-3.0T/4.0P-S4-B1	5.0	6.1	7.2	9.5	3.0T/4.0P	505348
NVF7-4.0T/5.5P-S4-B1	5.9	10.5	9.5	12.2	4.0T/5.5P	505349
NVF7-5.5T/7.5P-S4-B1	8.6	14.6	12.2	16.2	5.5T/7.5P	505350
NVF7-7.5T/11P-S4-B1	13	19	16.2	24.6	7.5T/11P	505351
NVF7-11T/15P-S4-B1	18	26	24.6	31.4	11T/15P	505352
NVF7-15T/18.5P-S4-B1	25	34	31.4	37	15T/18.5P	505353
NVF7-18.5T/22P-S4-B1	29	38.5	37	45	18.5T/22P	505354
NVF7-22T/30P-S4-B1	34	46.5	45	60	22T/30P	505355
NVF7-30T/37P-S4-1 NVF7-30T/37P-S4-B1	46	62	60	75	30T/37P	505356、505357
NVF7-37T/45P-S4-1 NVF7-37T/45P-S4-B1	57	76	75	90	37T/45P	505358、505359
NVF7-45T/55P-S4-1 NVF7-45T/55P-S4-B1	69	92	90	110	45T/55P	505360、505361
NVF7-55T/75P-S4-1 NVF7-55T/75P-S4-B1	85	113	110	150	55T/75P	505362、505363
NVF7-75T/90P-S4-1 NVF7-75T/90P-S4-B1	114	157	150	176	75T/90P	505364、505365
NVF7-90T/110P-S4-1 NVF7-90T/110P-S4-B1	133	180	176	210	90T/110P	505366、505367
NVF7-110T/132P-S4-1 NVF7-110T/132P-S4-B1	160	214	210	253	110T/132P	505368、505369
NVF7-132T/160P-S4-1	195	256	253	300	132T/160P	505370
NVF7-160T/185P-S4-1	236	307	300	340	160T/185P	505371
NVF7-185T/200P-S4-1	267	345	340	380	185T/200P	505372
NVF7-200T/220P-S4-1	305	430	380	420	200T/220P	505373
NVF7-220T/250P-S4-1	350	477	420	470	220T/250P	505374
NVF7-250T/280P-S4-1	420	526	470	520	250T/280P	505375
NVF7-280T/315P-S4-1	450	605	520	600	280T/315P	505376
NVF7-315T/355P-S4-1	516	647	600	670	315T/355P	595278
NVF7-355T/400P-S4-1	565	700	670	750	355T/400P	595280
NVF7-400T/450P-S4-1	630	800	750	810	400T/450P	595282
NVF7-450T/500P-S4-1	715	865	810	860	450T/500P	595284
NVF7-500T/550P-S4-1	850	1008	860	990	500T/550P	595286
NVF7-560T/630P-S4-1	902	1160	990	1200	560T/630P	595288

Three-phase 230V Drive Model Specification Table

Model (standard built in LED)	power supply capacity kVA	Input current A	Heavy load rated current A	Light load rated current A	Motor power kW (Heavy load/light load)	ordering code
NVF7-0.4T/0.75P-S2-B	2	1.8	1.5	2.5	0.4T/0.75P	512455
NVF7-0.75T/1.1P-S2-B	2.8	2.4	2.5	3.1	0.75T/1.1P	512456
NVF7-1.1T/1.5P-S2-B	4.1	3.7	3.1	3.7	1.1T/1.5P	512457
NVF7-1.5T/2.2P-S2-B	3.0	4.6	3.7	5.0	1.5T/2.2P	512458
NVF7-2.2T/3.0P-S2-B	3.0	6.3	5.0	7.2	2.2T/3.0P	512459
NVF7-3.0T/4.0P-S2-B	5.0	6.1	7.2	9.5	3.0T/4.0P	512460
NVF7-4.0T/5.5P-S2-B	5.9	10.5	9.5	12.2	4.0T/5.5P	512461
NVF7-5.5T/7.5P-S2-B	8.6	14.6	12.2	16.2	5.5T/7.5P	512462
NVF7-7.5T/9.5P-S2-B	13	19	16.2	24.6	7.5T/11P	512463
NVF7-9.5T/11P-S2-B	20	51	37	45	9.5T/11P	512464
NVF7-11T/15P-S2-B	18	26	24.6	31.4	11T/15P	512465
NVF7-15T/18.5P-S2 NVF7-15T/18.5P-S2-B	25	34	31.4	37	15T/18.5P	512466、512467
NVF7-18.5T/22P-S2 NVF7-18.5T/22P-S2-B	29	38.5	37	45	18.5T/22P	512468、512469
NVF7-22T/30P-S2 NVF7-22T/30P-S2-B	34	46.5	45	60	22T/30P	512470、512471
NVF7-30T/37P-S2 NVF7-30T/37P-S2-B	46	62	60	75	30T/37P	512472、512473
NVF7-37T/45P-S2 NVF7-37T/45P-S2-B	57	76	75	90	37T/45P	512474、512475
NVF7-45T/55P-S2 NVF7-45T/55P-S2-B	69	92	90	110	45T/55P	512476、512477

Model (standard built in LCD)	power supply capacity kVA	Input current A	Heavy load rated current A	Light load rated current A	Motor power kW (Heavy load/light load)	ordering code
NVF7-0.4T/0.75P-S2-B1	2	1.8	1.5	2.5	0.4T/0.75P	512478
NVF7-0.75T/1.1P-S2-B1	2.8	2.4	2.5	3.1	0.75T/1.1P	512479
NVF7-1.1T/1.5P-S2-B1	4.1	3.7	3.1	3.7	1.1T/1.5P	512480
NVF7-1.5T/2.2P-S2-B1	3.0	4.6	3.7	5.0	1.5T/2.2P	512481
NVF7-2.2T/3.0P-S2-B1	3.0	6.3	5.0	7.2	2.2T/3.0P	512482
NVF7-3.0T/4.0P-S2-B1	5.0	6.1	7.2	9.5	3.0T/4.0P	512483
NVF7-4.0T/5.5P-S2-B1	5.9	10.5	9.5	12.2	4.0T/5.5P	512484
NVF7-5.5T/7.5P-S2-B1	8.6	14.6	12.2	16.2	5.5T/7.5P	512485
NVF7-7.5T/9.5P-S2-B1	13	19	16.2	24.6	7.5T/11P	512486
NVF7-9.5T/11P-S2-B1	20	51	37	45	9.5T/11P	512487
NVF7-11T/15P-S2-B1	18	26	24.6	31.4	11T/15P	512488
NVF7-15T/18.5P-S2-B	25	34	31.4	37	15T/18.5P	512467
NVF7-18.5T/22P-S2-B	29	38.5	37	45	18.5T/22P	512469
NVF7-22T/30P-S2-B	34	46.5	45	60	22T/30P	512471
NVF7-30T/37P-S2-B	46	62	60	75	30T/37P	512473
NVF7-37T/45P-S2-B	57	76	75	90	37T/45P	512475
NVF7-45T/55P-S2-B	69	92	92	110	45T/55P	512477
NVF7-15T/18.5P-S2-1 NVF7-15T/18.5P-S2-B1	25	34	31.5	37	15T/18.5P	512489、512490
NVF7-18.5T/22P-S2-1 NVF7-18.5T/22P-S2-B1	29	38.5	37	45	18.5T/22P	512491、512492
NVF7-22T/30P-S2-1 NVF7-22T/30P-S2-B1	34	46.5	45	60	22T/30P	512493、512494
NVF7-30T/37P-S2-1 NVF7-30T/37P-S2-B1	46	62	60	75	30T/37P	512495、512496
NVF7-37T/45P-S2-1 NVF7-37T/45P-S2-B1	57	76	75	90	37T/45P	512497、512498
NVF7-45T/55P-S2-1 NVF7-45T/55P-S2-B1	69	92	90	110	45T/55P	512499、512500

Single-phase 230V Drive Model Specification Table

Model (standard built in LED)	power supply capacity kVA	Input current A	Heavy load rated current A	Light load rated current A	Motor power kW (Heavy load/ light load)	ordering code
NVF7-0.4T-D2-B	1.1	5.0	2.3	-	0.4T	512501
NVF7-0.75T-D2-B	2.1	9.5	4.0	-	0.75T	512502
NVF7-1.5T-D2-B	2.9	15.5	7.0	-	1.5T	512503
NVF7-2.2T-D2-B	5.3	20	9.6	-	2.2T	512504
NVF7-3.0T-D2-B	6.5	26	12.2	-	3.0T	512505
NVF7-4.0T-D2-B	7.5	32	16.2	-	4.0T	512506

Model (standard built in LCD)	power supply capacity kVA	Input current A	Heavy load rated current A	Light load rated current A	Motor power kW (Heavy load/ light load)	ordering code
NVF7-0.4T-D2-B1	1.1	5.0	2.3	-	0.4T	512507
NVF7-0.75T-D2-B1	2.1	9.5	4.0	-	0.75T	512508
NVF7-1.5T-D2-B1	2.9	15.5	7.0	-	1.5T	512509
NVF7-2.2T-D2-B1	5.3	20	9.6	-	2.2T	512510
NVF7-3.0T-D2-B1	6.5	26	12.2	-	3.0T	512511
NVF7-4.0T-D2-B1	7.5	32	16.2	-	4.0T	512512

Model	Description	ordering code
NVF7- LED VA7KEY01	Operation panel LED	513138
NVF7- LCD VA7KEY02	Operation panel LCD	513139
NVF7-VA7KEY03	Mounting bracket	513140
NVF7-VA7CB02	Extension cable 2 meters	513141
NVF7-VA7CB04	Extension cable 4 meters	513142
NVF7-Temp	NVF7 Motor Temperature Detection IO Expansion Card,support PTC/PT100/PT1000, compatible with firmware version 1.04 and later, customer can read the firmware version through U0-79.	583979
NVF7-AdapterUSB	USB type C to RS485/422 converter, used to connect PC to variable frequence drive	602771

SAP No	Model Description	Power supply(V)	Load type	Motor power(kW)	Ordering code
G711541900000001	NVF7-0.4T/0.75P-S4-B	3 phase 380	T/P	0.4T/0.75P	505309
G711541900000002	NVF7-0.75T/1.1P-S4-B	3 phase 380	T/P	0.75T/1.1P	505310
G711541900000003	NVF7-1.1T/1.5P-S4-B	3 phase 380	T/P	1.1T/1.5P	505311
G711541900000004	NVF7-1.5T/2.2P-S4-B	3 phase 380	T/P	1.5T/2.2P	505312
G711541900000005	NVF7-2.2T/3.0P-S4-B	3 phase 380	T/P	2.2T/3.0P	505313
G711541900000006	NVF7-3.0T/4.0P-S4-B	3 phase 380	T/P	3.0T/4.0P	505314
G711541900000007	NVF7-4.0T/5.5P-S4-B	3 phase 380	T/P	4.0T/5.5P	505315
G711541900000008	NVF7-5.5T/7.5P-S4-B	3 phase 380	T/P	5.5T/7.5P	505316
G711541900000009	NVF7-7.5T/11P-S4-B	3 phase 380	T/P	7.5T/11P	505317
G711541900000010	NVF7-11T/15P-S4-B	3 phase 380	T/P	11T/15P	505318
G711541900000011	NVF7-15T/18.5P-S4-B	3 phase 380	T/P	15T/18.5P	505319
G711541900000012	NVF7-18.5T/22P-S4-B	3 phase 380	T/P	18.5T/22P	505320
G711541900000013	NVF7-22T/30P-S4-B	3 phase 380	T/P	22T/30P	505321
G711541900000014	NVF7-30T/37P-S4	3 phase 380	T/P	30T/37P	505322
G711541900000015	NVF7-30T/37P-S4-B	3 phase 380	T/P	30T/37P	505323
G711541900000016	NVF7-37T/45P-S4	3 phase 380	T/P	37T/45P	505324
G711541900000017	NVF7-37T/45P-S4-B	3 phase 380	T/P	37T/45P	505325
G711541900000018	NVF7-45T/55P-S4	3 phase 380	T/P	45T/55P	505326
G711541900000019	NVF7-45T/55P-S4-B	3 phase 380	T/P	45T/55P	505327
G711541900000020	NVF7-55T/75P-S4	3 phase 380	T/P	55T/75P	505328
G711541900000021	NVF7-55T/75P-S4-B	3 phase 380	T/P	55T/75P	505329
G711541900000022	NVF7-75T/90P-S4	3 phase 380	T/P	75T/90P	505330
G711541900000023	NVF7-75T/90P-S4-B	3 phase 380	T/P	75T/90P	505331
G711541900000024	NVF7-90T/110P-S4	3 phase 380	T/P	90T/110P	505332
G711541900000025	NVF7-90T/110P-S4-B	3 phase 380	T/P	90T/110P	505333
G711541900000026	NVF7-110T/132P-S4	3 phase 380	T/P	110T/132P	505334
G711541900000027	NVF7-110T/132P-S4-B	3 phase 380	T/P	110T/132P	505335
G711541900000028	NVF7-132T/160P-S4	3 phase 380	T/P	132T/160P	505336
G711541900000029	NVF7-160T/185P-S4	3 phase 380	T/P	160T/185P	505337
G711541900000030	NVF7-185T/200P-S4	3 phase 380	T/P	185T/200P	505338
G711541900000031	NVF7-200T/220P-S4	3 phase 380	T/P	200T/220P	505339
G711541900000032	NVF7-220T/250P-S4	3 phase 380	T/P	220T/250P	505340
G711541900000033	NVF7-250T/280P-S4	3 phase 380	T/P	250T/280P	505341
G711541900000034	NVF7-280T/315P-S4	3 phase 380	T/P	280T/315P	505342
G711541900000074	NVF7-0.4T/0.75P-S4-B1	3 phase 380	T/P	0.4T/0.75P	505343
G711541900000075	NVF7-0.75T/1.1P-S4-B1	3 phase 380	T/P	0.75T/1.1P	505344
G711541900000076	NVF7-1.1T/1.5P-S4-B1	3 phase 380	T/P	1.1T/1.5P	505345
G711541900000077	NVF7-1.5T/2.2P-S4-B1	3 phase 380	T/P	1.5T/2.2P	505346
G711541900000078	NVF7-2.2T/3.0P-S4-B1	3 phase 380	T/P	2.2T/3.0P	505347
G711541900000079	NVF7-3.0T/4.0P-S4-B1	3 phase 380	T/P	3.0T/4.0P	505348
G711541900000080	NVF7-4.0T/5.5P-S4-B1	3 phase 380	T/P	4.0T/5.5P	505349
G711541900000081	NVF7-5.5T/7.5P-S4-B1	3 phase 380	T/P	5.5T/7.5P	505350
G711541900000082	NVF7-7.5T/11P-S4-B1	3 phase 380	T/P	7.5T/11P	505351

SAP No	Model Description	Power supply(V)	Load type	Motor power(kW)	Ordering code
G711541900000083	NVF7-11T/15P-S4-B1	3 phase 380	T/P	11T/15P	505352
G711541900000084	NVF7-15T/18.5P-S4-B1	3 phase 380	T/P	15T/18.5P	505353
G711541900000085	NVF7-18.5T/22P-S4-B1	3 phase 380	T/P	18.5T/22P	505354
G711541900000086	NVF7-22T/30P-S4-B1	3 phase 380	T/P	22T/30P	505355
G711541900000087	NVF7-30T/37P-S4-1	3 phase 380	T/P	30T/37P	505356
G711541900000088	NVF7-30T/37P-S4-B1	3 phase 380	T/P	30T/37P	505357
G711541900000089	NVF7-37T/45P-S4-1	3 phase 380	T/P	37T/45P	505358
G711541900000090	NVF7-37T/45P-S4-B1	3 phase 380	T/P	37T/45P	505359
G711541900000091	NVF7-45T/55P-S4-1	3 phase 380	T/P	45T/55P	505360
G711541900000092	NVF7-45T/55P-S4-B1	3 phase 380	T/P	45T/55P	505361
G711541900000093	NVF7-55T/75P-S4-1	3 phase 380	T/P	55T/75P	505362
G711541900000094	NVF7-55T/75P-S4-B1	3 phase 380	T/P	55T/75P	505363
G711541900000095	NVF7-75T/90P-S4-1	3 phase 380	T/P	75T/90P	505364
G711541900000096	NVF7-75T/90P-S4-B1	3 phase 380	T/P	75T/90P	505365
G711541900000097	NVF7-90T/110P-S4-1	3 phase 380	T/P	90T/110P	505366
G711541900000098	NVF7-90T/110P-S4-B1	3 phase 380	T/P	90T/110P	505367
G711541900000099	NVF7-110T/132P-S4-1	3 phase 380	T/P	110T/132P	505368
G711541900000100	NVF7-110T/132P-S4-B1	3 phase 380	T/P	110T/132P	505369
G711541900000101	NVF7-132T/160P-S4-1	3 phase 380	T/P	132T/160P	505370
G711541900000102	NVF7-160T/185P-S4-1	3 phase 380	T/P	160T/185P	505371
G711541900000103	NVF7-185T/200P-S4-1	3 phase 380	T/P	185T/200P	505372
G711541900000104	NVF7-200T/220P-S4-1	3 phase 380	T/P	200T/220P	505373
G711541900000105	NVF7-220T/250P-S4-1	3 phase 380	T/P	220T/250P	505374
G711541900000106	NVF7-250T/280P-S4-1	3 phase 380	T/P	250T/280P	505375
G711541900000107	NVF7-280T/315P-S4-1	3 phase 380	T/P	280T/315P	505376
G711541900000108	NVF7-0.4T/0.75P-S2-B	3 phase 230	T/P	0.4T/0.75P	512455
G711541900000109	NVF7-0.75T/1.1P-S2-B	3 phase 230	T/P	0.75T/1.1P	512456
G711541900000110	NVF7-1.1T/1.5P-S2-B	3 phase 230	T/P	1.1T/1.5P	512457
G711541900000111	NVF7-1.5T/2.2P-S2-B	3 phase 230	T/P	1.5T/2.2P	512458
G711541900000112	NVF7-2.2T/3.0P-S2-B	3 phase 230	T/P	2.2T/3.0P	512459
G711541900000113	NVF7-3.0T/4.0P-S2-B	3 phase 230	T/P	3.0T/4.0P	512460
G711541900000114	NVF7-4.0T/5.5P-S2-B	3 phase 230	T/P	4.0T/5.5P	512461
G711541900000115	NVF7-5.5T/7.5P-S2-B	3 phase 230	T/P	5.5T/7.5P	512462
G711541900000116	NVF7-7.5T/9.5P-S2-B	3 phase 230	T/P	7.5T/9.5P	512463
G711541900000117	NVF7-9.5T/11P-S2-B	3 phase 230	T/P	9.5T/11P	512464
G711541900000118	NVF7-11T/15P-S2-B	3 phase 230	T/P	11T/15P	512465
G711541900000119	NVF7-15T/18.5P-S2	3 phase 230	T/P	15T/18.5P	512466
G711541900000120	NVF7-15T/18.5P-S2-B	3 phase 230	T/P	15T/18.5P	512467
G711541900000121	NVF7-18.5T/22P-S2	3 phase 230	T/P	18.5T/22P	512468
G711541900000122	NVF7-18.5T/22P-S2-B	3 phase 230	T/P	18.5T/22P	512469
G711541900000123	NVF7-22T/30P-S2	3 phase 230	T/P	22T/30P	512470
G711541900000124	NVF7-22T/30P-S2-B	3 phase 230	T/P	22T/30P	512471
G711541900000125	NVF7-30T/37P-S2	3 phase 230	T/P	30T/37P	512472

SAP No	Model Description	Power supply(V)	Load type	Motor power(kW)	Ordering code
G711541900000126	NVF7-30T/37P-S2-B	3 phase 230	T/P	30T/37P	512473
G711541900000127	NVF7-37T/45P-S2	3 phase 230	T/P	37T/45P	512474
G711541900000128	NVF7-37T/45P-S2-B	3 phase 230	T/P	37T/45P	512475
G711541900000129	NVF7-45T/55P-S2	3 phase 230	T/P	45T/55P	512476
G711541900000130	NVF7-45T/55P-S2-B	3 phase 230	T/P	45T/55P	512477
G711541900000131	NVF7-0.4T/0.75P-S2-B1	3 phase 230	T/P	0.4T/0.75P	512478
G711541900000132	NVF7-0.75T/1.1P-S2-B1	3 phase 230	T/P	0.75T/1.1P	512479
G711541900000133	NVF7-1.1T/1.5P-S2-B1	3 phase 230	T/P	1.1T/1.5P	512480
G711541900000134	NVF7-1.5T/2.2P-S2-B1	3 phase 230	T/P	1.5T/2.2P	512481
G711541900000135	NVF7-2.2T/3.0P-S2-B1	3 phase 230	T/P	2.2T/3.0P	512482
G711541900000136	NVF7-3.0T/4.0P-S2-B1	3 phase 230	T/P	3.0T/4.0P	512483
G711541900000137	NVF7-4.0T/5.5P-S2-B1	3 phase 230	T/P	4.0T/5.5P	512484
G711541900000138	NVF7-5.5T/7.5P-S2-B1	3 phase 230	T/P	5.5T/7.5P	512485
G711541900000139	NVF7-7.5T/9.5P-S2-B1	3 phase 230	T/P	7.5T/9.5P	512486
G711541900000140	NVF7-9.5T/11P-S2-B1	3 phase 230	T/P	9.5T/11P	512487
G711541900000141	NVF7-11T/15P-S2-B1	3 phase 230	T/P	11T/15P	512488
G711541900000142	NVF7-15T/18.5P-S2-1	3 phase 230	T/P	15T/18.5P	512489
G711541900000143	NVF7-15T/18.5P-S2-B1	3 phase 230	T/P	15T/18.5P	512490
G711541900000144	NVF7-18.5T/22P-S2-1	3 phase 230	T/P	18.5T/22P	512491
G711541900000145	NVF7-18.5T/22P-S2-B1	3 phase 230	T/P	18.5T/22P	512492
G711541900000146	NVF7-22T/30P-S2-1	3 phase 230	T/P	22T/30P	512493
G711541900000147	NVF7-22T/30P-S2-B1	3 phase 230	T/P	22T/30P	512494
G711541900000148	NVF7-30T/37P-S2-1	3 phase 230	T/P	30T/37P	512495
G711541900000149	NVF7-30T/37P-S2-B1	3 phase 230	T/P	30T/37P	512496
G711541900000150	NVF7-37T/45P-S2-1	3 phase 230	T/P	37T/45P	512497
G711541900000151	NVF7-37T/45P-S2-B1	3 phase 230	T/P	37T/45P	512498
G711541900000152	NVF7-45T/55P-S2-1	3 phase 230	T/P	45T/55P	512499
G711541900000153	NVF7-45T/55P-S2-B1	3 phase 230	T/P	45T/55P	512500
G711541900000154	NVF7-0.4T-D2-B	1 phase 230	T	0.4T	512501
G711541900000155	NVF7-0.75T-D2-B	1 phase 230	T	0.75T	512502
G711541900000156	NVF7-1.5T-D2-B	1 phase 230	T	1.5T	512503
G711541900000157	NVF7-2.2T-D2-B	1 phase 230	T	2.2T	512504
G711541900000158	NVF7-3.0T-D2-B	1 phase 230	T	3.0T	512505
G711541900000159	NVF7-4.0T-D2-B	1 phase 230	T	4.0T	512506
G711541900000160	NVF7-0.4T-D2-B1	1 phase 230	T	0.4T	512507
G711541900000161	NVF7-0.75T-D2-B1	1 phase 230	T	0.75T	512508
G711541900000162	NVF7-1.5T-D2-B1	1 phase 230	T	1.5T	512509
G711541900000163	NVF7-2.2T-D2-B1	1 phase 230	T	2.2T	512510
G711541900000164	NVF7-3.0T-D2-B1	1 phase 230	T	3.0T	512511
G711541900000165	NVF7-4.0T-D2-B1	1 phase 230	T	4.0T	512512

SAP No	Model Description	Power supply(V)	Load type	Motor power(kW)	Ordering code
G711541900000166	VA7KEY01				513138
G711541900000167	VA7KEY02				513139
G711541900000168	VA7KEY03				513140
G711541900000169	VA7CB02				513141
G711541900000170	VA7CB04				513142
G711541900000171	NVF7-Temp				583979
G711541900000185	NVF7-AdapterUSB				602771
G711541900000172	NVF7-315T/355P-S4	3 phase 380	T/P	315T/355P	595277
G711541900000173	NVF7-315T/355P-S4-1	3 phase 380	T/P	315T/355P	595278
G711541900000174	NVF7-355T/400P-S4	3 phase 380	T/P	355T/400P	595279
G711541900000175	NVF7-355T/400P-S4-1	3 phase 380	T/P	355T/400P	595280
G711541900000176	NVF7-400T/450P-S4	3 phase 380	T/P	400T/450P	595281
G711541900000177	NVF7-400T/450P-S4-1	3 phase 380	T/P	400T/450P	595282
G711541900000178	NVF7-450T/500P-S4	3 phase 380	T/P	450T/500P	595283
G711541900000179	NVF7-450T/500P-S4-1	3 phase 380	T/P	450T/500P	595284
G711541900000180	NVF7-500T/550P-S4	3 phase 380	T/P	500T/550P	595285
G711541900000181	NVF7-500T/550P-S4-1	3 phase 380	T/P	500T/550P	595286
G711541900000182	NVF7-560T/630P-S4	3 phase 380	T/P	560T/630P	595287
G711541900000183	NVF7-560T/630P-S4-1	3 phase 380	T/P	560T/630P	595288
G711541900000186	NVF7-3.0T-S6-1(R)	3 phase 690	T	3.0T	616172
G711541900000187	NVF7-3.0T-S6(R)	3 phase 690	T	3.0T	616173
G711541900000188	NVF7-4.0T-S6-1(R)	3 phase 690	T	4.0T	616174
G711541900000189	NVF7-4.0T-S6(R)	3 phase 690	T	4.0T	616175
G711541900000190	NVF7-5.5T-S6-1(R)	3 phase 690	T	5.5T	616176
G711541900000191	NVF7-5.5T-S6(R)	3 phase 690	T	5.5T	616177
G711541900000192	NVF7-7.5T-S6-1(R)	3 phase 690	T	7.5T	616178
G711541900000193	NVF7-7.5T-S6(R)	3 phase 690	T	7.5T	616179
G711541900000194	NVF7-11T-S6-1(R)	3 phase 690	T	11T	616180
G711541900000195	NVF7-11T-S6(R)	3 phase 690	T	11T	616181
G711541900000196	NVF7-15T-S6-1(R)	3 phase 690	T	15T	616182
G711541900000197	NVF7-15T-S6(R)	3 phase 690	T	15T	616183
G711541900000198	NVF7-18.5T-S6-1(R)	3 phase 690	T	18.5T	616184
G711541900000199	NVF7-18.5T-S6(R)	3 phase 690	T	18.5T	616185
G711541900000200	NVF7-22T-S6-1(R)	3 phase 690	T	22T	616186

SAP No	Model Description	Power supply(V)	Load type	Motor power(kW)	Ordering code
G711541900000201	NVF7-22T-S6(R)	3 phase 690	T	22T	616187
G711541900000202	NVF7-30T-S6-1(R)	3 phase 690	T	30T	616188
G711541900000203	NVF7-30T-S6(R)	3 phase 690	T	30T	616189
G711541900000204	NVF7-37T-S6-1(R)	3 phase 690	T	37T	616190
G711541900000205	NVF7-37T-S6(R)	3 phase 690	T	37T	616191
G711541900000206	NVF7-45T-S6-1(R)	3 phase 690	T	45T	616192
G711541900000207	NVF7-45T-S6(R)	3 phase 690	T	45T	616193
G711541900000208	NVF7-55T-S6-1(R)	3 phase 690	T	55T	616194
G711541900000209	NVF7-55T-S6(R)	3 phase 690	T	55T	616195
G711541900000210	NVF7-75T-S6-1(R)	3 phase 690	T	75T	616196
G711541900000211	NVF7-75T-S6(R)	3 phase 690	T	75T	616197
G711541900000212	NVF7-90T-S6-1(R)	3 phase 690	T	90T	616198
G711541900000213	NVF7-90T-S6(R)	3 phase 690	T	90T	616199
G711541900000214	NVF7-110T-S6-1(R)	3 phase 690	T	110T	616200
G711541900000215	NVF7-110T-S6(R)	3 phase 690	T	110T	616201
G711541900000216	NVF7-132T-S6-1(R)	3 phase 690	T	132T	616202
G711541900000217	NVF7-132T-S6(R)	3 phase 690	T	132T	616203
G711541900000218	NVF7-160T-S6-1(R)	3 phase 690	T	160T	616204
G711541900000219	NVF7-160T-S6(R)	3 phase 690	T	160T	616205
G711541900000220	NVF7-185T-S6(R)	3 phase 690	T	185T	616206
G711541900000221	NVF7-185T-S6-1(R)	3 phase 690	T	185T	616207
G711541900000222	NVF7-200T-S6-1(R)	3 phase 690	T	200T	616208
G711541900000223	NVF7-200T-S6(R)	3 phase 690	T	200T	616209
G711541900000224	NVF7-220T-S6-1(R)	3 phase 690	T	220T	616210
G711541900000225	NVF7-220T-S6(R)	3 phase 690	T	220T	616211
G711541900000226	NVF7-250T-S6-1(R)	3 phase 690	T	250T	616212
G711541900000227	NVF7-250T-S6(R)	3 phase 690	T	250T	616213
G711541900000228	NVF7-280T-S6-1(R)	3 phase 690	T	280T	616214
G711541900000229	NVF7-280T-S6(R)	3 phase 690	T	280T	616215
G711541900000230	NVF7-315T-S6-1(R)	3 phase 690	T	315T	616216
G711541900000231	NVF7-315T-S6(R)	3 phase 690	T	315T	616217
G711541900000232	NVF7-355T-S6-1(R)	3 phase 690	T	355T	616218
G711541900000233	NVF7-355T-S6(R)	3 phase 690	T	355T	616219
G711541900000234	NVF7-400T-S6-1(R)	3 phase 690	T	400T	616220

SAP No	Model Description	Power supply(V)	Load type	Motor power(kW)	Ordering code
G711541900000235	NVF7-400T-S6(R)	3 phase 690	T	400T	616221
G711541900000236	NVF7-450T-S6-1(R)	3 phase 690	T	450T	616222
G711541900000237	NVF7-450T-S6(R)	3 phase 690	T	450T	616223
G711541900000238	NVF7-500T-S6-1(R)	3 phase 690	T	500T	616224
G711541900000239	NVF7-500T-S6(R)	3 phase 690	T	500T	616225
G711541900000240	NVF7-560T-S6-1(R)	3 phase 690	T	560T	616226
G711541900000241	NVF7-560T-S6(R)	3 phase 690	T	560T	616227

7. Detailed technical parameters and performance

Output	Voltage	0 ~ rated input voltage
	Frequency	(0-500) Hz
	overload capacity	S4（380~480V）:T-type: 150% rated current for 1 min and 180% rated current for :10s P-type: 120% rated current for 1 min and 150% rated current for :2s S6（525~690V）: 150% rated current for 1 min and 180% rated current for :2s
Main Controls Performance	control mode	Flux vector control (FVC) Sensorless vector control (SVC) V/F control;
	modulation mode	Space vector PWM modulation
	Starting torque	SVC: 150% rated torque at 0.25Hz FVC: 180% rated torque at 0Hz 150% rated torque at V/F: 0.5Hz
	frequency resolution	Digital setting: 0.01Hz; Analog setting: maximum frequency x 0.5%
	Torque boost	Automatic Torque Boost, Manual Torque Boost
	V/F curve	Straight V/F curve, VF full separation mode, VF semi separation mode, multi-point V/F curve mode
	acceleration and deceleration curves	Linear acceleration and deceleration (4 types)
	Automatic current limiting	Automatic limitation of current during operation to prevent frequent overcurrent fault tripping
Customization features	Tap	Jog frequency range: (0.10~50.00) Hz Jog acceleration/deceleration time (0.1-6000.0) s
	Multi-stage speed operation	Multi-speed operation via control terminals
Peripheral Interface Characteristics	Run the command channel	Operator panel setting, control terminal setting and communication control setting can be switched in various ways
	digital inputs	5 channels of multi-function digital programmable input, including 1 channel of HDI high-speed pulse input
	Digital Output	1 multi-function digital programmable output, which can be set as high-speed pulse output or open collector output
	Analog Input	2 analog signal inputs Optional (0~20) mA, (4~20) mA current signal input or (0-10) V voltage signal input
	Analog Output	2 analog signal outputs Selectable (0~20) mA, (4~20) mA current output or (0~10) V voltage output respectively, which can realize the output of physical quantities such as set frequency and output frequency
	Relay Output	2-channel relay output, including 1-channel normally open and normally closed conversion output, 1-channel normally open output. Contact capacity: NO 5A, NC 3A, 250V (AC)
	RS485 communication interface	1 channel, supporting Modbus protocol
LED operation panel	LED display	It can display more than 20 kinds of parameters such as setting frequency, output frequency, output voltage, output current and so on
	Key lock	To realize full or partial locking of the keys
	function selection	Define the scope of action of some keys to prevent misuse
LCD operation panel	LCD display	2.4 inch, resolution 320*240
	Language	Display in Chinese & English & Russian and Spanish (English by default)
	Indicator light	1 status indicator

Continued from previous table

(optional)		
protection functions	With over-current protection, over-voltage protection, under-voltage protection, over-heating protection, overload protection, phase loss protection and other protection functions	
Structure	protection class	IP20
	Cooling method	axial DC fan cooling
mounting method		Wall-mounted, flange-mounted lamps
Efficiency		≥93% for 37kW and below; ≥95% for 45kW and above

8. Wiring diagram

NVF7

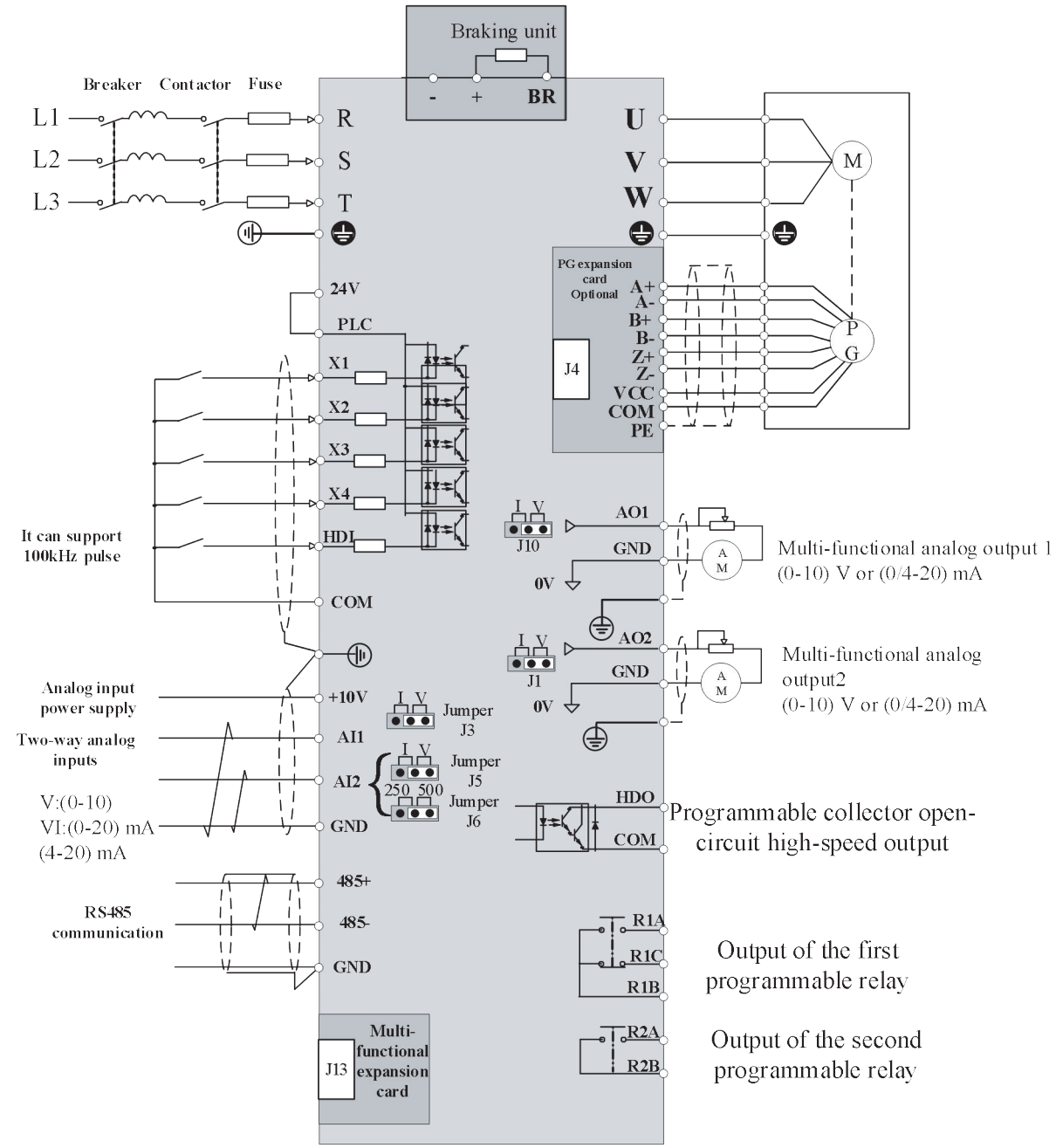

Notes of main circuit terminals

Terminal symbol	Terminal name	Functional Description	Wiring Precautions
R、S、T	Main circuit power input	Three-phase AC voltage input, connected to the grid	1. must be wired according to the terminal function, otherwise there is a risk of damage to the inverter, or even lead to fire. 2. The wiring length of the braking unit shall not exceed 10m, and shall use twisted pair or close double wire parallel wiring; 3. When external braking resistor is connected, do not connect the braking resistor directly to the DC bus, otherwise there is a danger of damaging the inverter, or even lead to fire.
U、V、W	Inverter output	Three-phase AC voltage output, generally connected to the motor	
⏚	Ground terminal	The safety grounding terminal must be reliably grounded, and the cross-sectional area of the grounding wire must not be smaller than the cross-sectional area of the input power line of the frequency converter	
+、-	positive and negative power terminals	positive and negative power terminals of the DC bus of the inverter	
B	Brake resistor connection terminals	Brake resistor connection terminals	

Notes of control terminals

Category	Terminals	Name	terminal function description	
Power supply	+10V	+10V power supply	External+10V power supply, maximum output current: 10mA It is generally used as the working power supply of the external potentiometer, and the resistance range of the potentiometer is 1k Ω~5k Ω	
	GND	+10V power supply ground		
	+24V	+24V power supply	Provide+24V power supply to the outside, which is generally used as the working power supply of digital input and output terminals and the power supply of external sensors Maximum output current: 200mA	
	COM	+24V power supply common terminal		
	PLC	External power input terminals	Factory default connection with+24V through short connector When using external power supply to drive X1~X4 and HDI, PLC needs to be connected to external power supply and disconnected from+24V power supply terminal	
analog inputs	AI1	Analog single ended input AI1	Voltage input range: 0Vdc~10Vdc, Current input range: 0mA~20mA or 4mA~20mA Decided by jumper J3 jumper selection Input impedance: 22k Ω for voltage input and 500 Ω for current input.	
	AI2	Analog single ended input AI2	Voltage input range: 0Vdc~10Vdc, Current input range: 0mA~20mA or 4mA~20mA Decided by jumper J5 jumper selection Input impedance: 22k Ω for voltage input, 500 Ω or 250 Ω for current input via J6 jumper	
analog output	AO1	Analog Output	The voltage or current output is determined by the selection of J10 and J1 jumpers on the control board Output voltage range: 0V~10V Output current range: 0mA~20mA or 4mA~20mA	
	AO2	Analog Output		
Communications	485+	RS485 communication interface 288	485 differential signal positive	Standard RS485 communication interface Please use twisted pair or shielded cable
	485-		485 differential signal negative	
digital input terminals	X1	Multi-function input terminal 1	Optical coupling isolation, compatible with bipolar inputs Input impedance: 1.39k Ω Voltage range for effective level input: 18V~30V Programmable multi-function switch input terminal, see function codes F5-00~F5-03	
	X2	Multi-function input terminal 2		
	X3	Multi-function input terminal 3		
	X4	Multi-function input terminal 4		
	HDI	High speed input terminal HDI	In addition to the characteristics of X1~X4, it can also be used as a high-speed pulse input channel Maximum input frequency: 100kHz Input impedance: 1.03k Ω	
digital output terminals	HDO	High-speed pulse output terminal	Constrained by parameter F6-00HDO terminal output mode selection When it is output as high-speed pulse, the highest frequency is 100kHz (set by F6-09) When it is used as collector open circuit output, it can program multiple function pulse signal output terminals, see function code F6-01	
Relay output terminal 1	R1B-R1A	normally open terminal contacts	For programmable multi-function relay output terminal, see function code F6-02 Contact driving capacity: 5A 250V (AC) 30Vdc,1A	
	R1B-R1C	Normally closed terminal contacts		
Relay output terminal 2	R2B-R2A	normally open terminal contacts	For programmable multi-function relay output terminal, see function code F6-04 Contact driving capacity: 5A 250V (AC) 30Vdc,1A	

9. Mounting dimensions (mm) & weight (kg) (380~480V)

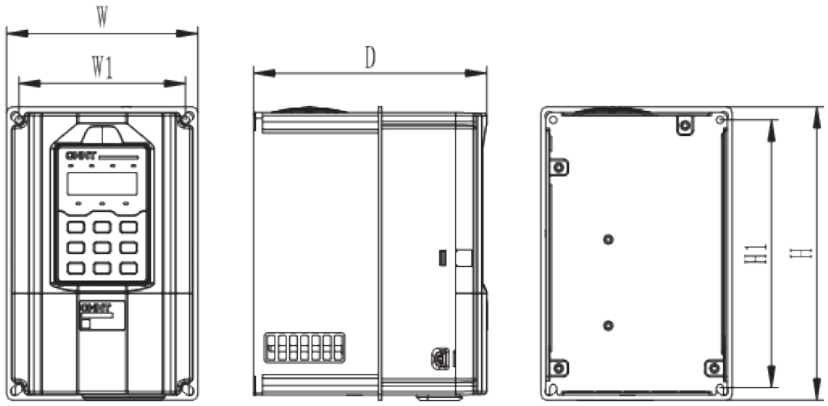

T2~T5

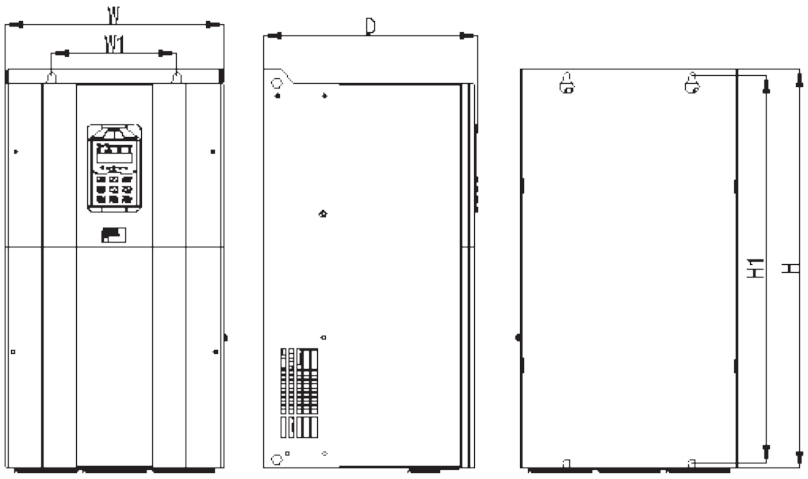

T6~T7

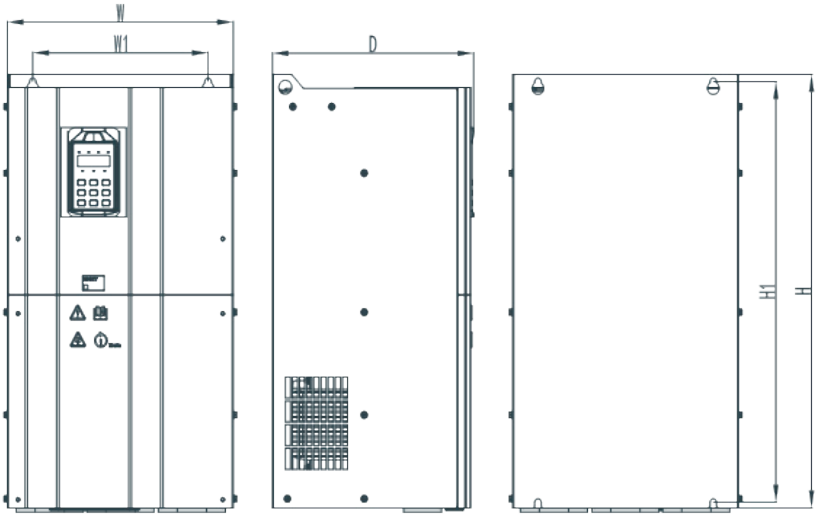

T8~T10

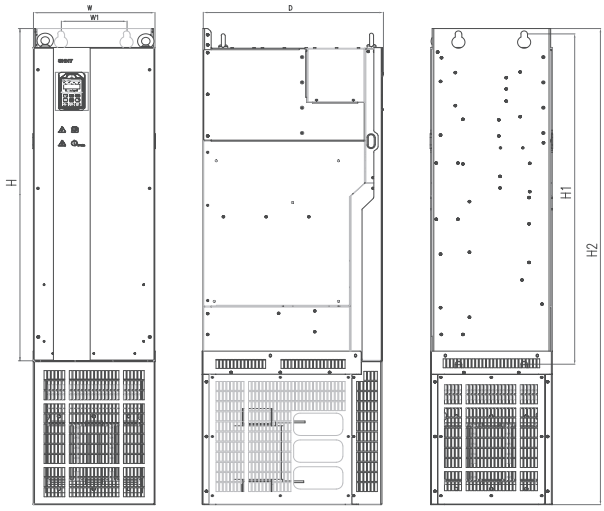

T11

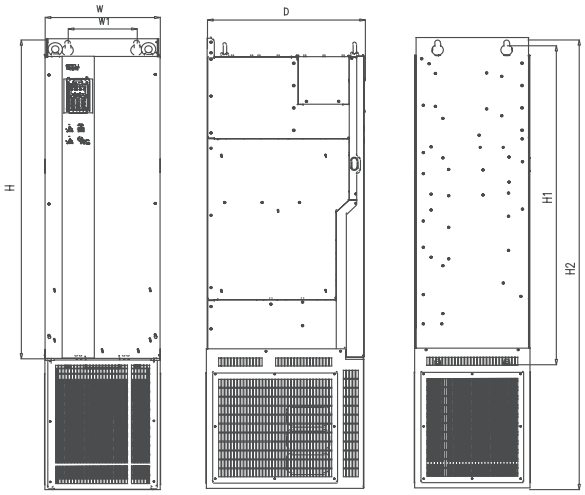

T12

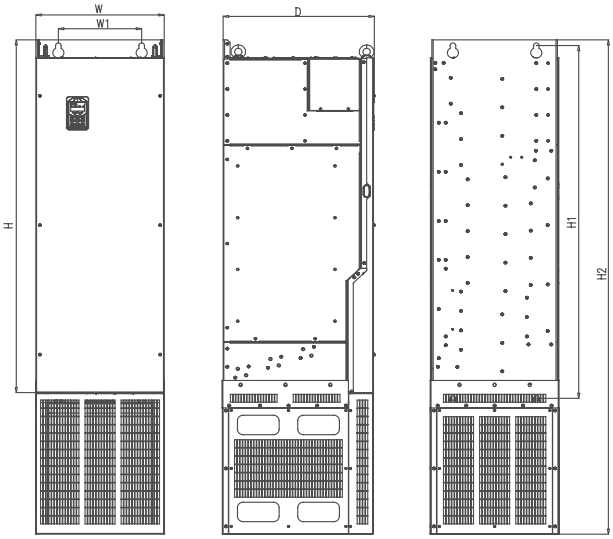

T13

Single phase 230V drive installation dimensions and weight

Terminal No.	W	H	D	W1	H1	Weight(Kg)
NVF7-0.4T-D2-B(1)	136.9	207.5	166.8	119.4	189.4	2.5
NVF7-0.75T-D2-B(1)						
NVF7-1.5T-D2-B(1)						
NVF7-2.2T-D2-B(1)						
NVF7-3.0T-D2-B(1)						
NVF7-0.4T-D2-B(1)						
NVF7-4.0T-D2-B(1)	152	262	186.4	129	239	3.7

Three phase 230V drive installation dimensions and weight

Terminal No.	W	H	D	W1	H1	Weight(Kg)
NVF7-0.4T/0.75P-S2-B(1) NVF7-0.75T/1.1P-S2-B(1) NVF7-1.1T/1.5P-S2-B(1) NVF7-1.5T/2.2P-S2-B(1) NVF7-2.2T/3.0P-S2-B(1) NVF7-3.0T/4.0P-S2-B(1)	136.9	207.5	166.8	119.4	189.4	2.5
NVF7-4.0T/5.5P-S2-B(1) NVF7-5.5T/7.5P-S2-B(1)	152	262	186.4	129	239	3.7
NVF7-7.5T/9.5P-S2-B(1	184	288	185.9	166	269	5.5
NVF7-9.5T/11P-S2-B(1) NVF7-11T/15P-S2-B(1)	218.4	358.5	223.6	196	335.5	11
NVF7-15T/18.5P-S2(-1) NVF7-15T/18.5P-S2-B(1) NVF7-18.5T/22P-S2(-1) NVF7-18.5T/22P-S2-B(1)	270	466	268.1	223	443	21
NVF7-22T/30P-S2(-1) NVF7-22T/30P-S2-B(1) NVF7-30T/37P-S2(-1) NVF7-30T/37P-S2-B(1)	313	580	309.6	180	562	38
NVF7-37T/45P-S2(-1) NVF7-37T/45P-S2-B(1) NVF7-45T/55P-S2(-1) NVF7-45T/55P-S2-B(1)	348	620	310.3	270	602	49

Three phase 380V drive installation dimensions and weight

Terminal No.	W	H	D	W1	H1	Weight (Kg)
NVF7-0.4T/0.75P-S4-B(1)	136.9	207.5	166.8	119.4	189.4	2.5
NVF7-0.75T/1.1P-S4-B(1)						
NVF7-1.1T/1.5P-S4-B(1)						
NVF7-1.5T/2.2P-S4-B(1)						
NVF7-2.2T/3.0P-S4-B(1)						
NVF7-3.0T/4.0P-S4-B(1)						
NVF7-4.0T/5.5P-S4-B(1)						
NVF7-5.5T/7.5P-S4-B(1)						
NVF7-7.5T/11P-S4-B(1)	152	262	186.4	129	239	3.7
NVF7-11T/15P-S4-B(1)						
NVF7-15T/18.5P-S4-B(1)	184	288	185.9	169	269	5.5
NVF7-18.5T/22P-S4-B(1)	218.4	358.5	223.6	189.2	335.5	11
NVF7-22T/30P-S4-B(1)						
NVF7-30T/37P-S4-B(1)	270	466	268.1	233	443	21
NVF7-37T/45P-S4-B(1)						
NVF7-45T/55P-S4-B(1)	313	580	309.6	180	562	38
NVF7-55T/75P-S4-B(1)						
NVF7-75T/90P-S4-B(1)	348	620	310.3	270	604	49
NVF7-90T/110P-S4-B(1)						
NVF7-110T/132P-S4-B(1)						
NVF7-132T/160P-S4(-1)	400	915	331.7	320	891	84
NVF7-160T/185P-S4(-1)						
NVF7-185T/200P-S4(-1)	400	915	361.7	320	891	90
NVF7-200T/220P-S4(-1)						
NVF7-220T/250P-S4(-1)	370	1100	418.5	400	1070	118
NVF7-250T/280P-S4(-1)						
NVF7-280T/315P-S4(-1)						
NVF7-315T/355P-S4(-1)	400	1250	545	240	1213	168
NVF7-355T/400P-S4(-1)						
NVF7-400T/450P-S4(-1)						
NVF7-450T/500P-S4(-1)	462	1400	540	300	1363	215
NVF7-500T/560P-S4(-1)						
NVF7-560T/630P-S4(-1)						

Three phase 690V drive installation dimensions and weight

Terminal No.	W	H	D	W1	H1	Weight(Kg)
NVF7-3.0T-S6(-1) NVF7-4.0T-S6(-1) NVF7-5.5T-S6(-1) NVF7-7.5T-S6(-1) NVF7-11T-S6(-1) NVF7-15T-S6(-1) NVF7-18.5T-S6(-1) NVF7-22T-S6(-1) NVF7-30T-S6(-1) NVF7-37T-S6(-1)	270	466	268.1	223	443	21
NVF7-45T-S6(-1) NVF7-55T-S6(-1)	313	580	309.6	180	562	38
NVF7-75T-S6(-1) NVF7-90T-S6(-1) NVF7-110T-S6(-1)	348	620	310.3	270	602	49
NVF7-132T-S6(-1) NVF7-160T-S6(-1) NVF7-185T-S6(-1) NVF7-200T-S6(-1) NVF7-220T-S6(-1) NVF7-250T-S6(-1)	400	915	362	320	891	90
NVF7-280T-S6(-1) NVF7-315T-S6(-1) NVF7-355T-S6(-1) NVF7-400T-S6(-1)	550	1100	418.3	400	1070	
NVF7-450T-S6(-1) NVF7-500T-S6(-1) NVF7-560T-S6(-1)	650	1200	426.3	160	1163	