IEC AC Empty Socket

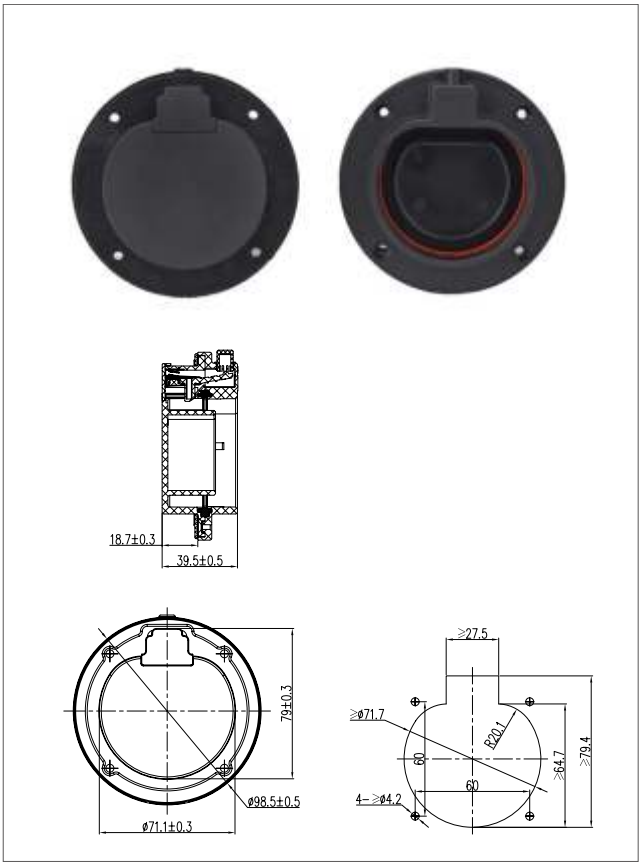

AC Empty socket installation screw accessories
M4 nut/4 pcs
Φ 4 spring cushion/4 pcs
Φ 4 flat washer/4 pcs
Hexagon socket countersunk head screws M4 X 20/4 pcs