YSS 50 Series

UL LISTED
[PV MANUL-DISCONNECT SWITCH]
E482690

UL508i Certificate Number: E482690

1 Brand
2 Type
3 OFF
4 ON
5 Electrical symbol

Application

YSS series DC disconnect switch in UL version is the best DC switch solution for solar inventer integrated.

- The first DC switch UL508i certificate in China.
- 2P switch at max DC 1000V/30A or750V/50A per conductor.
- With special arcing extinguish instruction and patent, for reliable and fastcutting off the DC arcing.
- The series are suitable for multiple independent MPPTs.
- Lockable handle for safer application and system maintain.

Appearance Introduction



Type Instruction

Y	SS	.1	- 50/T	-2	
		.2	- 50	-2	
Manufacturer Code	Product Code	Mounting	Max Rated Current	Pole	
	Product Code	.1:Panel Mounting .2:Standard Din rail	50A	2P,4P,6P, 8P	

Parameter

Electrical Characteristics		
Rated Working Voltage	Ue	Details in diagram
Rated Current	Ie	Details in diagram
Rated impulse withstand voltage	Uimp	8kV
Rated short-time withstand current (1s)	Icw	1.5kA
Rated short-circuit making capacity	Icm	2.0kA
Standard Short Circuit Rating		5kA
High-Fault Short Circuit Rating		8kA
Installation Environment		
Number of cycles of operation(With current)		6000
Number of cycles of operation(Without current)		10000
Pole		2/4/6/8
Mounting		Panel Mounting / Standard Din rail
Tightening torque terminal screws M4 , min. - max.M4		1.2N • m-1.8N • m
Tightening torque panel mountig nut, min. - max.		2.0N·m~2.5N·m
Tightening torque M3 screw in the standard black knob,min.-max.		0.5N • m-0. 7N • m
Tightening torque M3 screw in the Extension rod type knob,min.-max.		1.5N • m-1. 8N • m
Ambient temperature allowed between		-40°C ~ +85°C
Storage temperature allowed between		-40°C ~ +85°C
Relative Humidity		90%
Pollution degree		2
IP Class Protection		≥IP66（Type 4X）

Parameter

Type		Rated Current(UL508i) 350V / 500V / 600V	750V	1000V	Poles in series	Number of Strings
 YSS.1-50/T-2	 YSS.2-50-2 Type S knob available	16A	50A	16A	2	1
		18A				
		20A		22A		
		25A				
		32A				
		38A		25A		
		40A				
		45A		30A		
		50A				
 YSS.1-50/T-4	 YSS.2-50-4 Type S knob available	16A	50A	16A	2	2
		18A				
		20A		22A		
		25A				
		32A				
		38A		25A		
		40A				
		45A		30A		
		50A				
 YSS.1-50/T-6	 YSS.2-50-6 Type S knob available	16A	50A	16A	2	3
		18A				
		20A		22A		
		25A				
		32A				
		38A		25A		
		40A				
		45A		30A		
		50A				
 YSS.1-50/T-8	 YSS.2-50-8 Type S knob available	16A	50A	16A	2	4
		18A				
		20A		22A		
		25A				
		32A				
		38A		25A		
		40A				
		45A		30A		
		50A				

Switching Configurations

Type	2P	4P	6P	8P
Contacts Wiring diagram			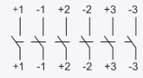	
Switching example				

Operation Knob Type

Picture	Suitable Type	Strucrure details
	YSS.1-50/T YSS.2-50	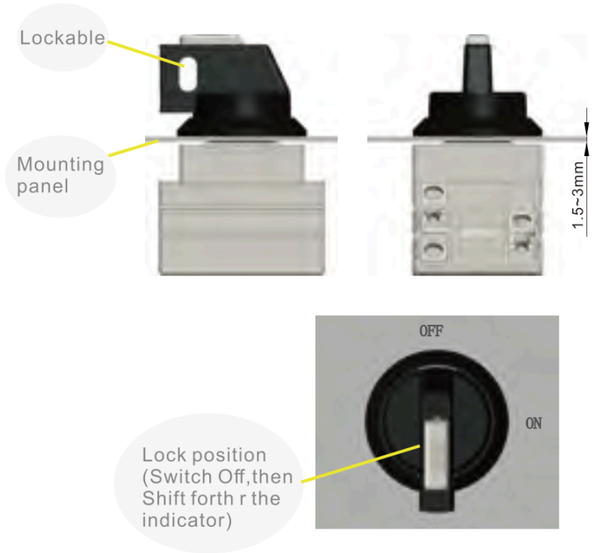
 S type handle konb	Only for YSS.2-50	 

Type	H(min.-max)
2P	130mm-280mm
4P	150mm-300mm
6P	170mm-320mm
8P	190mm-340mm

Dimensions(mm)

YSS.1-50/T Series mm

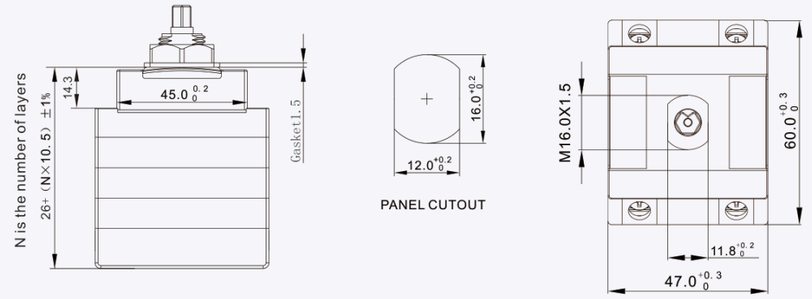

YSS.2-50 Series mm

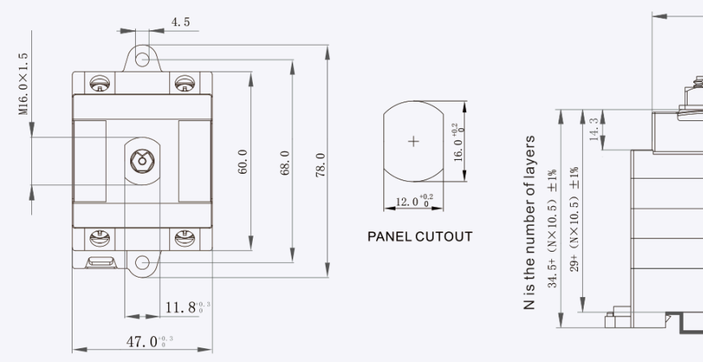

Wiring direction

YSS.1-50/T

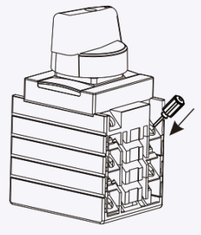

YSS.2-50

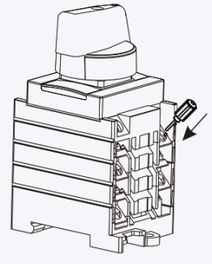

Wiring Diagram

Wires per pole	Conductor material	Wire size(AWG,mm²)	Torque
1	Copper (Cu)	12 AWG-6 AWG / 2.5mm²~16mmm²	1.8N·m

YSS 50 Series

UL LISTED
[PV MANUL-DISCONNECT SWITCH]
E482690

UL508i Certificate Number: E482690

1 Brand
2 Type
3 OFF
4 ON
5 Electrical symbol

YSS.1-50/T



YSS.2-50



YSS.2-50
with S type handle konb



Application

YSS series DC disconnect switch in UL version is the best DC switch solution for solar inventer integrated.

- The first DC switch UL508i certificate in China.
- 2P switch at max DC 1500V/13A per conductor.
- With special arcing extinguish instruction and patent, for reliable and fast cutting off the DC arcing.
- The series are suitable for multiple independent MPPTs.
- Lockable handle for safer application and system maintain.

Appearance Introduction

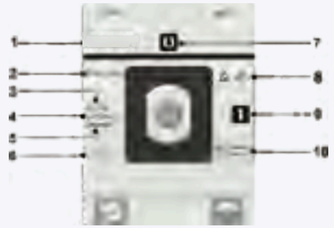

Type Instruction

Y	SS	. 1	- 50/T	-2	-	1500V	
		. 2	- 50	-2			
↓	↓	↓	↓	↓		↓	
Manufacturer Code	Product Code	Mounting	Max Rated Current	Pole		Rated Voltage	
	Product Code	.1:Panel Mounting .2:Standard Din rail	50A	2P, 4P, 6P, 8P		1500V	

Parameter

Electrical Characteristics		
Rated Working Voltage	Ue	Details in diagram
Rated Current	Ie	Details in diagram
Rated impulse withstand voltage	Uimp	8kV
Rated short-time withstand current (1s)	Icw	1.5kA
Rated short-circuit making capacity	Icm	2.0kA
Standard Short Circuit Rating		5kA
High-Fault Short Circuit Rating		8kA
Installation Environment		
Number of cycles of operation(With current)		6000
Number of cycles of operation(Without current)		10000
Pole		2/4/6/8
Mounting		Panel Mounting / Standard Din rail
Tightening torque terminal screws M4 , min. - max.M4		1.2N • m-1.8N • m
Tightening torque panel mounting nut, min. - max.		2.0N·m~2.5N·m
Tightening torque M3 screw in the standard black knob,min.-max.		0.5N • m-0. 7N • m
Tightening torque M3 screw in the Extension rod type knob,min.-max.		1.5N • m-1. 8N • m
Ambient temperature allowed between		-40°C ~ +85°C
Storage temperature allowed between		-40°C ~ +85°C
Relative Humidity		90%
Pollution degree		2
IP Class Protection		≥IP66（Type 4X）

Parameter

Type		Rated Current(UL508i) 1500V	Poles in series	Number of Strings
 YSS.1-50/T-2-1500V	 YSS.2-50-2-1500V Type S knob available	13A	2	1
 YSS.1-50/T-4-1500V	 YSS.2-50-4-1500V Type S knob available	13A	2	2
 YSS.1-50/T-6-1500V	 YSS.2-50-6-1500V Type S knob available	13A	2	3
 YSS.1-50/T-8-1500V	 YSS.2-50-8-1500V Type S knob available	13A	2	4

Switching Configurations

Type	2P	4P	6P	8P
Contacts Wiring diagram			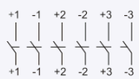	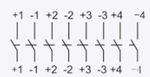
Switching example				

Operation Knob Type

Picture	Suitable Type	Strucrure details
	YSS.1-50/T-1500V YSS.2-50-1500V	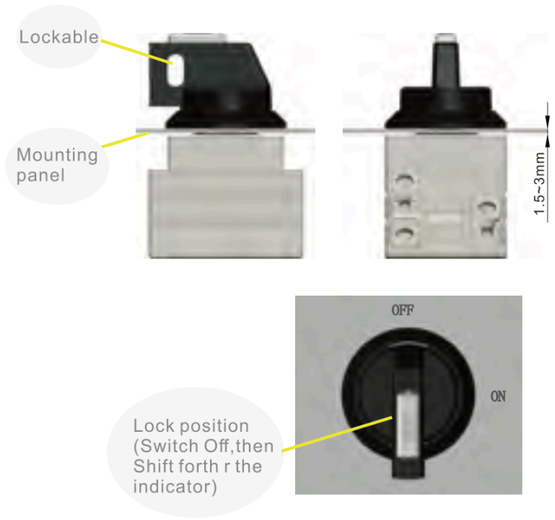
 S type handle konb	Only for YSS.2-50-1500V	 

Type	H(min.-max)
2P	130mm-280mm
4P	150mm-300mm
6P	170mm-320mm
8P	190mm-340mm

Dimensions(mm)

YSS.1-50/T Series mm

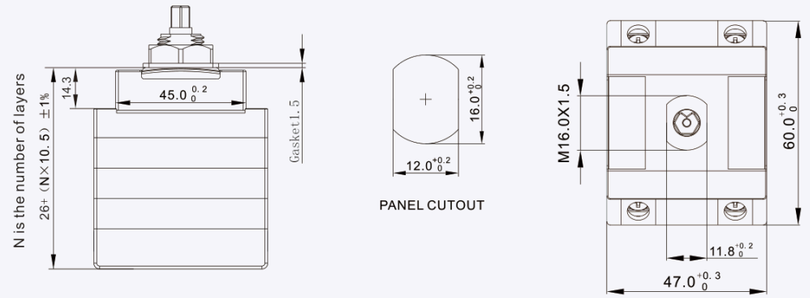

YSS.2-50 Series mm

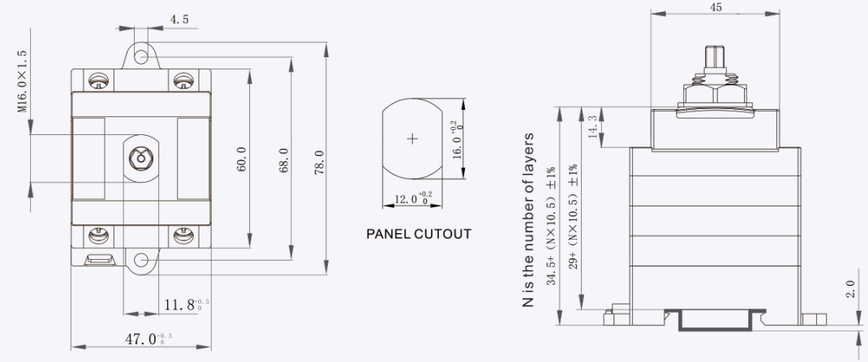

Wiring direction

YSS.1-50/T-1500V

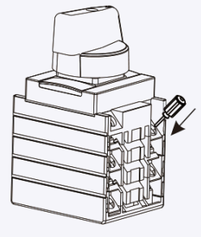

YSS.2-50-1500V

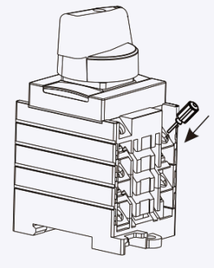

Wiring Diagram

Wires per pole	Conductor material	Wire size(AWG,mm²)	Torque
1	Copper (Cu)	12 AWG-6 AWG / 2.5mm²~16mmm²	1.8N·m

YSS 63F Series

[PV MANUL-DISCONNECT SWITCH]
E482690

UL508i

1 Brand
2 Type
3 OFF
4 ON
5 Electrical symbol

Application

YSS-63F Series DC disconnect switch is used in 1-350KW solar inverter, comply with UL508i standard, 2P for 1 load up to DC1500V 25A/DC1000V 50A. low temperature rising, long worklife and short arcing time, For Multiple independent MPPTs

Appearance Introduction



Type Instruction

Y	SS	.1 / .2	-	63	-	F	-	2/4/6/8
Manufacturer code	Product code	Mounting method		Conventional Free air thermal current		Signal Auxiliary		UL Standard Wiring
	Disconnect switch	.1:Panel mounting .2:Rail mounting						2/4/6/8P

Parameter

Electrical Characteristics			
Rated Working Voltage	Ue	See tables for details	
Rated Working Current	Ie	See tables for details	
Rated Insulation Voltage	Ui	1500V	
Conventional free air thermal current	Ith	63A	
Rated impulse withstand voltage	Uimp	8kV	
Rated short-time withstand current(1s)	Icw	1.0kA	
Rated short-circuit making capacity	Icm	1.5kA	
Rated conditional short-circuit current(kA)		8kA	
Installation Environment			
Number of cycles of operation(with current)		6000	
Number of cycles of operation(without current)		10000	
Operation rate		120/h	
Pole		2/4/6/8	
Mounting		Panel mounting	Rail mounting
Tightening torque terminal screws M4, min.-max.		1.2N·m~1.8N·m	
Tightening torque panel mounting nut, min.-max.		2.0N·m~2.5N·m	
Tightening torque M3 screw in the knob,min.-max.		0.5N·m~0.7N·m	
Ambient temperature allowed between		-40°C~+70°C	
Storage temperature allowed between		-40°C~+70°C	
Relative Humidity		90%	
Pollution degree		2	
IP rating terminals		IP20	
IP rating panel		IP66	
Wiring rating		14 AWG- 8AWG, Stranded	$2.5mm^2$~$10.0mm^2$

Auxiliary Micro Switch Parameter

Rated Value	DC48V 0.1A / DC 12V 0.3A / AC 125/250V 0.1A
Work Frequence	Mechanical 60/min Electrical 20/min
Work Life	Mechanical ≥500000 Electrical ≥100000
Withstand voltage between terminals	AC600V, 50/60Hz, 1min
Protection Degree	IP67
Contact type	Normally Open

Wiring Diagram

Type		Rated Parameter 1000V	1300V	1500V	Poles in Series	Number of Strings
 YSS.1-63F-8	 YSS.2-63F-8	50A	40A	25A	2	4
 YSS.1-63F-6	 YSS.2-63F-6	50A	40A	25A	2	3
 YSS.1-63F-4	 YSS.2-63F-4	50A	40A	25A	2	2
 YSS.1-63F-2	 YSS.2-63F-2	50A	40A	25A	2	1

Switching Configurations

Type	2P	4P	6P	8P
Contacts Wiring diagram	+1 -1 Au / +1 -1 Au	+1 -1 +2 -2 Au / +1 -1 +2 -2 Au	+1 -1 +2 -2 +3 -3 Au / +1 -1 +2 -2 +3 -3 Au	+1 -1 +2 -2 +3 -3 +4 -4 Au / +1 -1 +2 -2 +3 -3 +4 -4 Au
Switching example				

Dimensions

YSS.1-63F

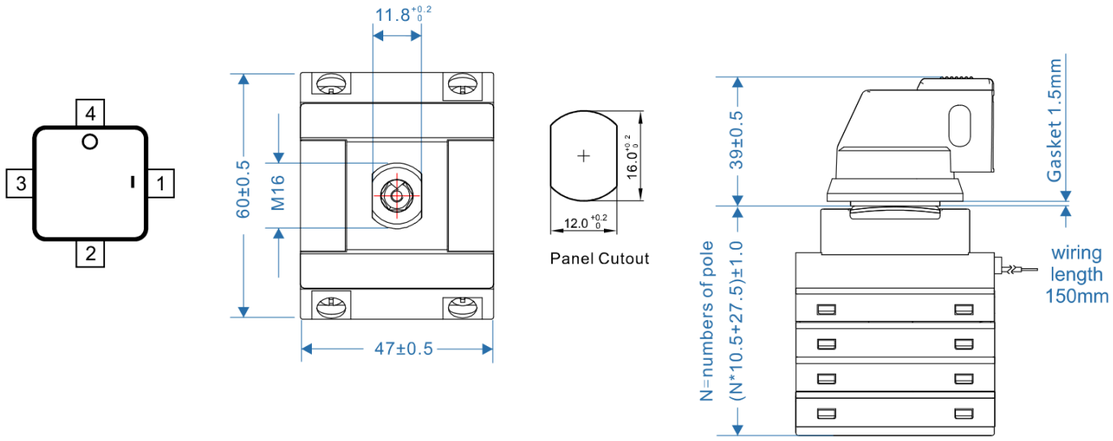

YSS.2-63F

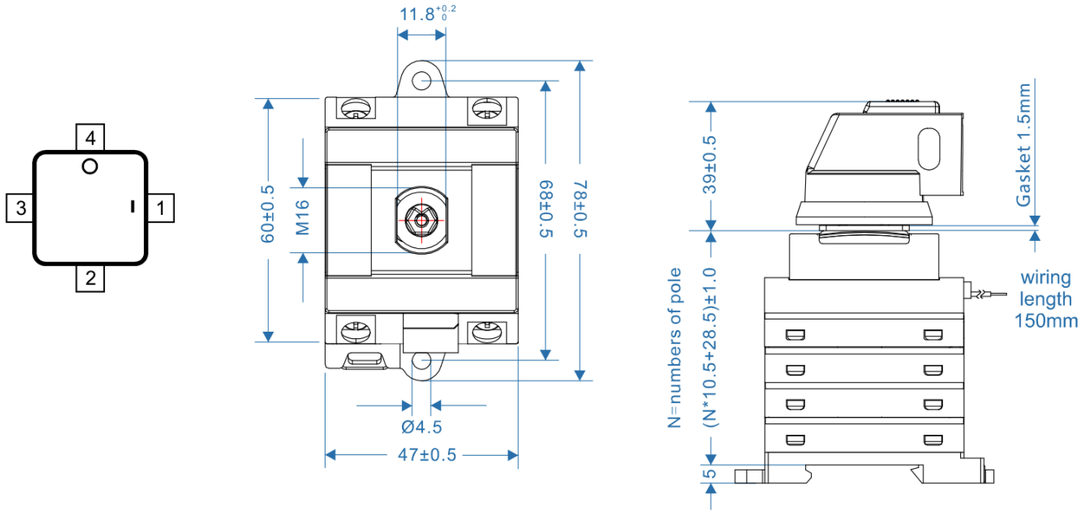

Operating Knob Type

Name	Applicable Model	Schematic diagram
Normal Operating Knob	YSS.1-63F-X	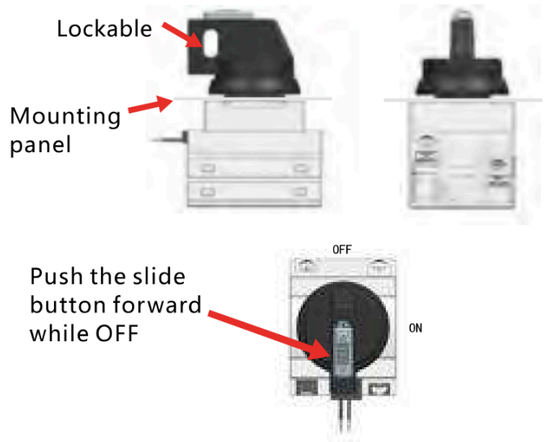
	YSS.2-63F-X	