Shanghai Newtrend Electric Co., Ltd.
No. 618 North Huting Road | 201615 | Shanghai | China
WhatsApp / WeChat: +86-18019187010 | sales@sntelec.com | www.sntelec.com

NT00C-63A HRC fuse link

gG / 500V AC - 120kA / 690V AC - 50kA

NT00C 63A is a gG knife-contact HRC fuse link for compatible low-voltage industrial and commercial protection assemblies. The illustrated unit is marked 500V AC / 120kA and 690V AC / 50kA. Select the voltage-specific breaking capacity and matching holder geometry together.



Physical model	NT00C
Rated current	63A
Operating class	gG
AC configuration 1	500V AC / 120kA
AC configuration 2	690V AC / 50kA
Standard marking	IEC 60269
Contact type	Knife contacts

Application and coordination

For overload and short-circuit protection of compatible low-voltage circuits. Match the fuse current, circuit voltage, prospective fault current and holder contact geometry. The two breaking capacities apply to their stated voltages. The exact pictured current is published here; other series ratings require separate confirmation.

NT-NT00C-EN | 2026-11

Dimensions and ordering

NT00C-63A / DIMENSIONS IN MILLIMETRES

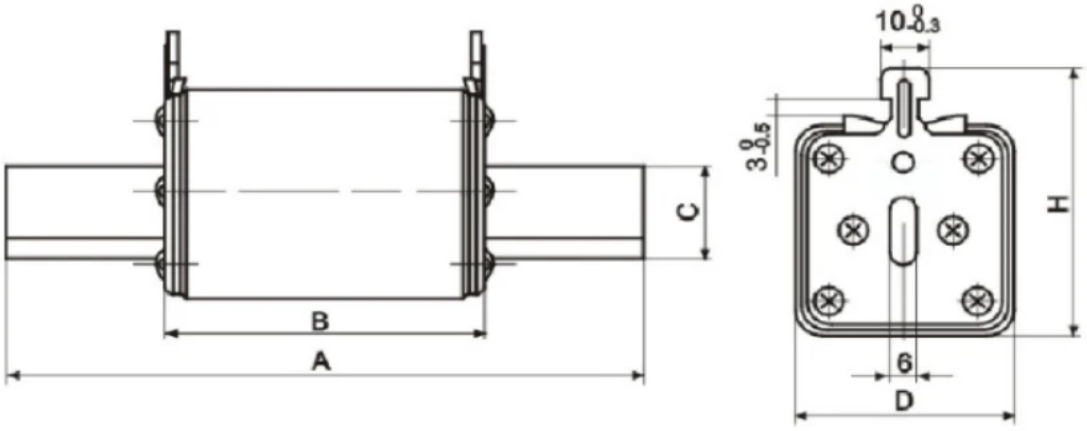

A	78mm
B	52mm
C	15mm
D	21mm
H	53mm

Specify your enquiry

Include NT00C, 63A, gG, 500V AC / 120kA or 690V AC / 50kA and quantity. Check dimensions A, B, C, D and H against the original view. Confirm holder compatibility and any indication requirements. Isolate the circuit before fuse replacement and follow the supplied equipment instructions.

NT-NT00C-EN | 2026-11