Shanghai Newtrend Electric Co., Ltd.
No. 618 North Huting Road | 201615 | Shanghai | China
WhatsApp / WeChat: +86-18019187010 | sales@sntelec.com | www.sntelec.com

NT0

160A / 500V / 690V AC / gG

NT0 is a 160A knife-blade gG fuse link for general-purpose low-voltage circuit protection. The illustrated unit is marked 500V AC at 120kA, 690V AC at 50kA and IEC 60269. Its dedicated dimensional reference specifies a 125mm overall length, 68mm body reference length and 15mm blade width.



Model	NT0
Rated current	160A
Rated voltage	500V AC / 690V AC
Breaking capacity at 500V AC	120kA
Breaking capacity at 690V AC	50kA
Operating class	gG
Standard marking	IEC 60269
Terminal type	Knife-blade contacts

Application and selection

For compatible industrial distribution and equipment-protection circuits. Match fuse current, system voltage and prospective fault current to the protected circuit, and coordinate the fuse with upstream and downstream devices. Use a holder suitable for the exact blade and body dimensions.

NT-NT0-EN | 2026-11

Dimensions and ordering

NT0 / DIMENSIONS IN MILLIMETRES

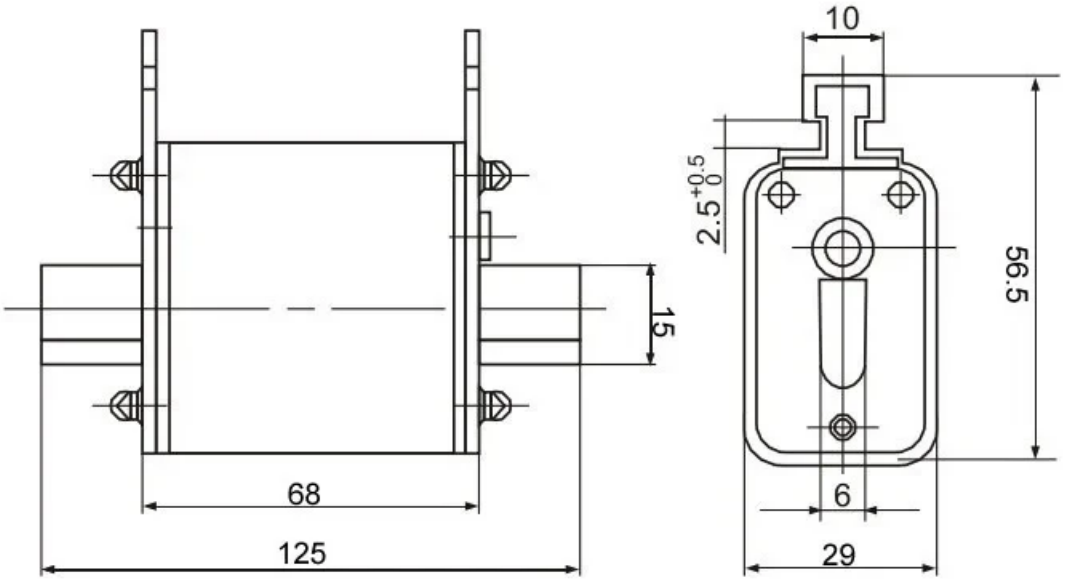

Overall length	125mm
Body reference length	68mm
Blade width	15mm
Body width	29mm
End height	56.5mm
Auxiliary slot width	6mm
Upper reference width	10mm
Upper projection	2.5mm +0.5mm

Specify your enquiry

Specify NT0, 160A, the AC operating voltage and quantity. Include the holder arrangement and installation or replacement requirements. Isolate and verify the circuit is de-energized before removing or installing the fuse.

NT-NT0-EN | 2026-11