NewTrend

32A-63A1P Modular Contactor

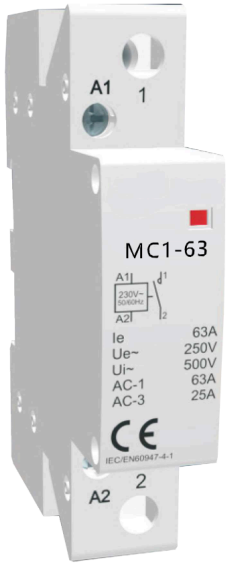

Current level: 40A 63A

Contact form: 1NO /1NC

Main parameter and technical performance

Power circuit		
Voltage rating(Ue)		250V AC
Frequency		50/60Hz
Endurance(O-C)		1,000,000 cycles
Electrical		100,000 cycles
Maximum number of switching operation a day		100
Insulation vwltage(Ui)		500 V AC
Pollution degree		2
Rated impulse withstand voltage(Uimp)		2.5kV(4kV for 12/24/48VAC)
Degree of protection (IEC 60529)	Device only	IP20
	Device in modular enclosure	IP40
Operating temperature		-5℃~+60℃
Storage temperature		-40℃~+70℃
Tropicalization(IEC 60068.1)		Treatment 2 (relative humidity 95% at 55℃
ELSV compliance(Extra Low Safety Voltage)for 12/24/48vac versions		
The product control conforms to the SELV(safety extra low voltage)requirements		

(1)In the case of contactor mounting in a enclosure for which the interior temperature is in range detween 50 ℃ and 60 ℃,it is necessary to use a spacer, between each contactor

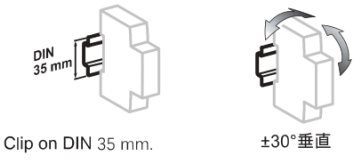

Clip on DIN 35 mm.

±30°垂直

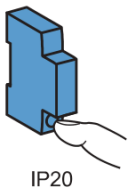

IP20



IP40

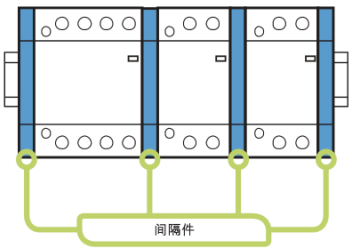

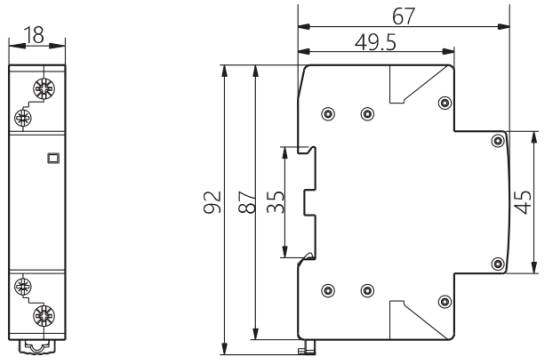

MC1-40/63A single pole contactor