H-800 Series
PV DC Isolation Switch

AS 60947.3
IEC/EN 60947-3
GB/T 14048. 3

1 Brand
2 Model
3 On Off
4 Rated Current
5 Nominal Insulation Voltage
6 Rated Withstand Voltage
7 Utilization Category
8 Auxiliary Contact
9 Rated Voltage
10 Certificate Mark
11 Electrical Symbol

Application

H-800 DC disconnect switch is designed and developed forsolar PV inverter,combiner box or any DC equipments build-in accordingto IEC60947-3.The DC load break switches provide safety isolationfor one DC circuit up to 1500VDC800A

Appearance Introduction

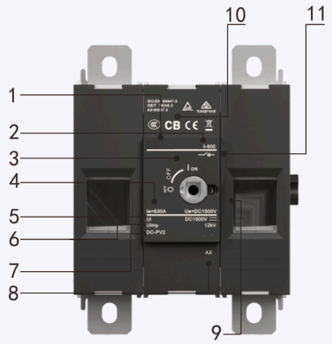

Type Instruction

H	–	800	–	2P	–	800A	–	/	–	AX
↓		↓		↓		↓		↓		↓
Model		Max Current		Pole		Rated Current		Assembling way		Auxiliary contact

PV DC Isolation Switch	800A	2P	☐ 630A ☐ 800A	☐ Blank ☐ A ☐ B ☐ A1	☐ without ☐ with

Parameter

Electrical Characteristics			
Rated Working Voltage	Ue	1000V \ 1500V	
Rated Current	Ie	630A	800A
Rated impulse withstand voltage	Uimp	12kV	
Rated short-time withstand current (1s)	Icw	10kA	
Rated short-circuit making capacity	Icm	10kA	
Contact resistance		＜0. 5mΩ	
Installation Environment			
Utiizatin category DC		DC-PV2	DC-PV1
Number of cycles of operation(With current)		200	100
Number of cycles of operation(Without current)		5000	
Pole		2	
Mounting		Base Screws Mounting	
Screws for mounting(M5)		2.0N·m~3.0N·m	
Wiring Screw(M14)		acc.IEC 60947-1 20N·m	
Ambient temperature allowed between		-40°C ~ +85°C	
Storage temperature allowed between		-40°C ~ +85°C	
Relative Humidity		90%	
Pollution degree		3	
IP rating terminals		IP20	
Outside the ark handle		IP66	

Wiring Graph

Model	Wiring Graph	Ue rated operational voltage DC Volts	Rated operationnal current	Poles in series	Number of Strings
H-800 	+/− −/+ +/− −/+ Example +/− −/+	1000V/1500V	630A/800A	1	1

Product Selection

Model	Front Operation			The side operation
	H-800-2P	H-800-2P-A	H-800-2P-B	H-800-2P-A1
H-800				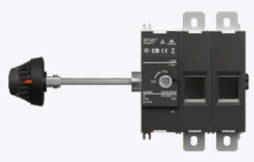

Dimension(mm)

H-800-2P

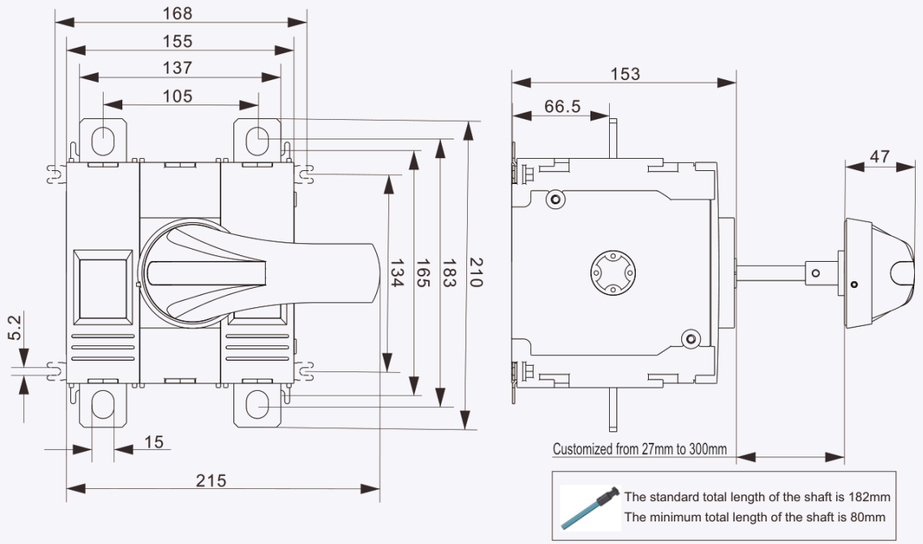

H-800-2P-A

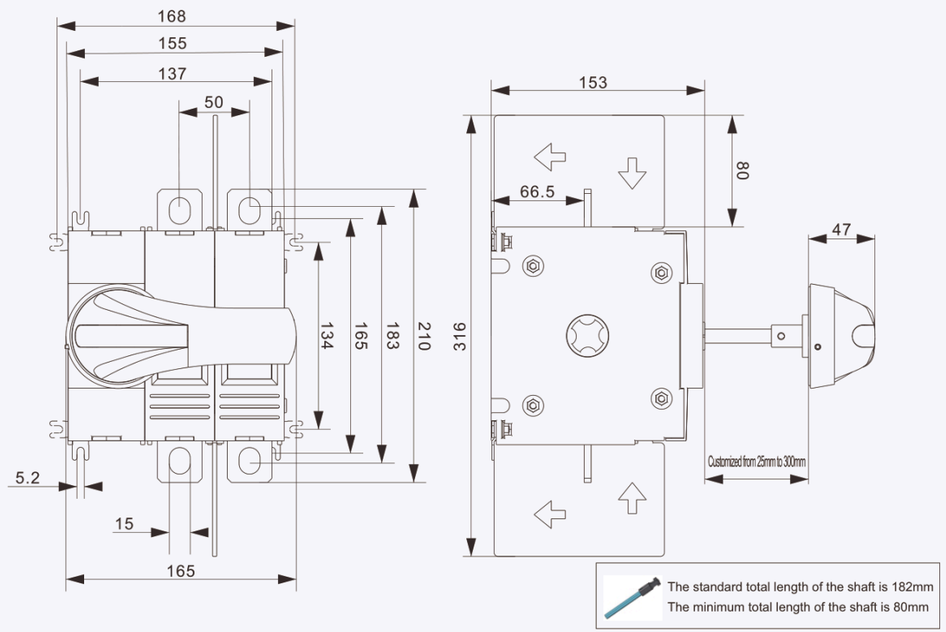

Dimension(mm)

H-800-2P-B

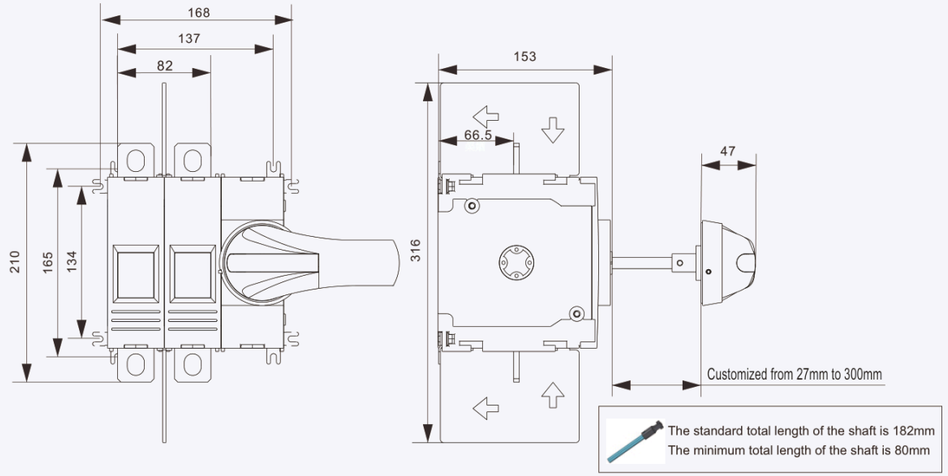

H-800-2P-A1

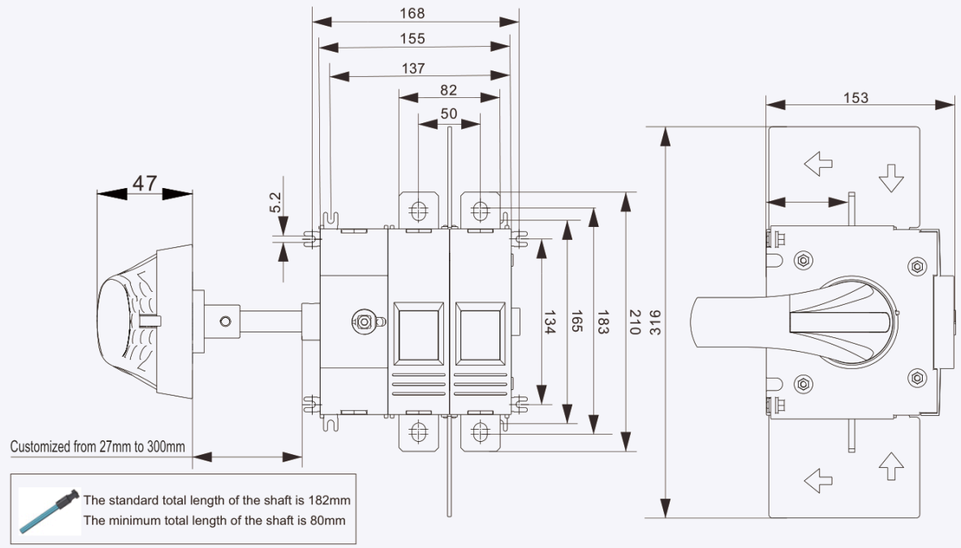

Switches and accessories

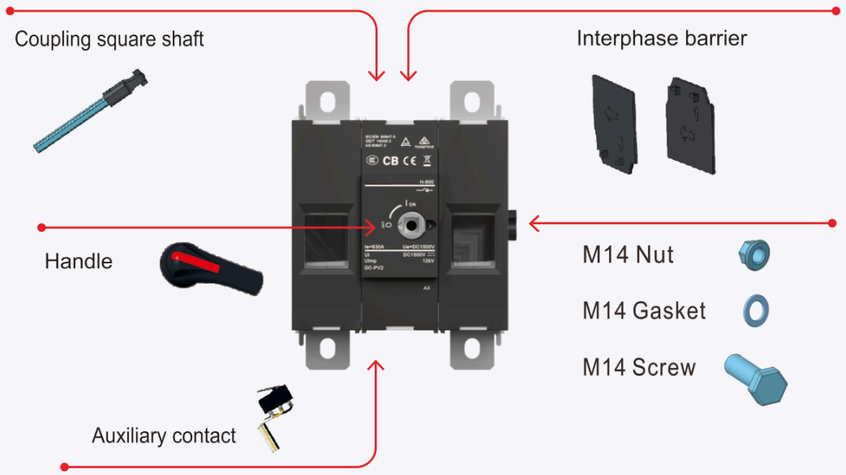

Accessory

Name	The attachment list
standard configuration	■ Handle
	■ Coupling square shaft (The standard length is 182mm)
	■ Interphase barrier
	■ M14 Binding kits
	■ Specification
apolegamy	□ Auxiliary contact
	□ Coupling square shaft Custom length _____ mm

Derating data

Derating Temperature

Tem / Type / Current	-40℃ ~ +55℃	+65℃	+70℃	+70℃	+80℃	+85℃
H-800	800A	780A	750A	720A	700A	680A

Derating Altitude

Altitude	2000m	3000m	4000m	5000m
Power frequency withstand voltage	3820VDC	3820VDC	3820VDC	3820VDC
Isolation voltage	1500VDC	1500VDC	1500VDC	1500VDC
Working current	800A	800A	780A	785A
Working voltage	N / A			

Installatioin and use

The connecting conductor shall be copper conductor or equivalent copper row.The sectional area shall be selected according to the table.

Rated current(A)	630A	800A
The area of a wire or copper conductor mm²	2x185mm²	2x240mm²

WARNING Verify that
all connections(including bridging link connections) are suitable for the rated current, prepared to ensure only conductive parts are clamped and tightened to the manufacturers required torque before energization.