DELIXI ®

ELECTRIC

CDQ0S Automatic Transfer Switching Equipment

User Manual

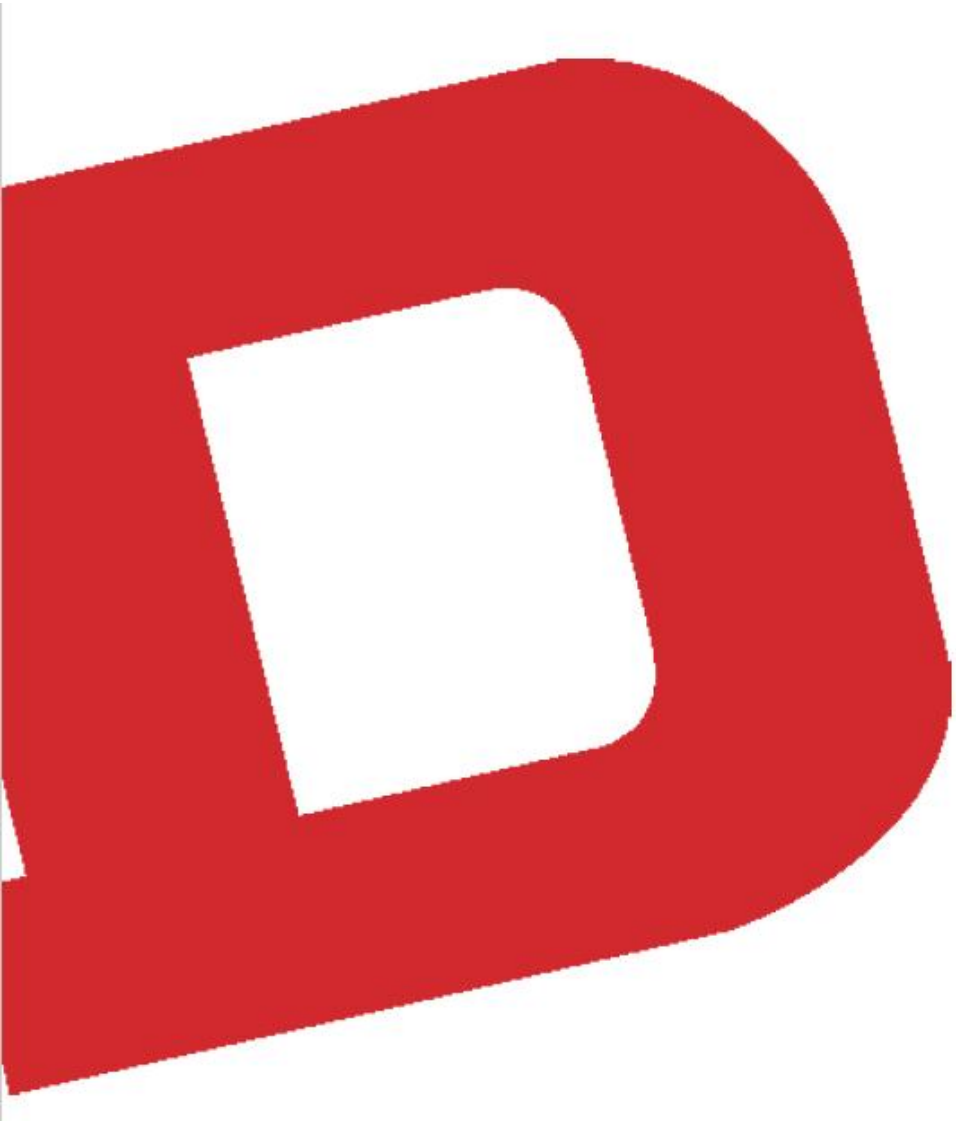

☐ Please read this user manual carefully before installing and using the product, and keep it properly for future reference.

Safety Instructions

Please read the instructions carefully before installing, operating, running, maintaining and inspecting the product. Please install and use the product accurately based on the contents specified in the instructions.



Danger:

- Do not operate the automatic transfer switching equipment with wet hands;
- Do not touch live conductive parts during operation;
- Ensure that the product is completely de-energized during maintenance and servicing;
- Do not test the product by short-circuiting;
- The manual operating handle must be removed during ATSE automatic operation.



Caution:

- Installation, maintenance, and servicing shall be carried out only by qualified personnel;
- The product shall be installed, commissioned, and used in accordance with the product manual;
- Before use, please confirm that the operating voltage, rated current, frequency, and characteristics of the product meet the application requirements;
- During installation, be sure to distinguish the normal power input terminal, standby power input terminal, and output terminal positions; otherwise, a short-circuit accident may occur;
- During installation, ensure that the phase sequence of the normal and standby power supplies is consistent; otherwise, reverse rotation of the downstream load motor may occur;
- For both 3-pole and 4-pole ATSE products, the neutral wire must be connected to the N terminal on the input side, and the N terminal must not be shared; otherwise, leakage protection devices may trip;
- To prevent phase-to-phase short circuits, phase barriers shall be installed between the copper busbars at the input and output terminals for isolation (2P products do not require phase barriers);
- Do not perform manual operation while in automatic mode; otherwise, the automatic transfer switching equipment will reset to its original position;
- When performing manual operation of the ATSE, the unit must first be switched to manual mode (the Auto/Manual button in the "O" position), and the dedicated operating handle shall be used. Manual operation allows normal power ON, standby power ON, and dual OFF operations;
- If insulation resistance testing or power frequency withstand voltage testing of the ATSE is required, the electronic components between the current circuits (including the controller) must first be disconnected; otherwise, product performance may be damaged;
- When disposing of the product, please properly handle the product waste. Thank you for your cooperation.

Contents

1 Understanding the CDQ0S Automatic Transfer Switching Equipment 4

1.1 Packing List 4

1.2 Product Structure and Nameplate 4

1.3 Features 5

1.4 Product Model and Meaning 5

1.5 Main Technical Parameters 5

2 Storage and Transportation 6

3 Installation 6

3.1 Normal Operating and Installation Conditions 6

3.2 Appearance and Installation Dimensions 7

3.3 Product Wiring Diagram 7

3.4 User Installation Instructions 11

3.5 Safety Clearance 14

3.6 Handle Operating Range 15

4 Operation and Commissioning 16

4.1.1 Description of Automatic Switch Transfer Operation Sequence 16

4.1.2 Description of automatic Switch Transfer Operation Sequence (G-type Controller) 17

4.2 Operating Modes 18

4.3 Precautions for Use 18

5 Troubleshooting 19

6 Company Commitment 19

1 Understanding the CDQ0S Automatic Transfer Switching Equipment

1.1 Packing List

No.	Name	Unit	Quantity	
1	Automatic transfer switching equipment	Unit	1	
2	Handle	Piece	1	
3	Mounting screws, nuts, and flat washers	Bag	1	
4	Phase barriers	Piece	3P/4P: 6 pieces	
5	Terminal connectors	Piece	2-pin terminal ×1; 4-pin terminal ×1; 7-pin terminal ×1;	Note: The 4-pin and 7-pin terminals work together for output to provide the functions of the basic product type; the 2-pin, 4-pin, and 7-pin terminals together can realize fire-fighting, generator, and 3P/4P product function switching.

After unpacking, check whether the product is intact, whether exposed metal parts are rusted, and whether the product has defects caused by improper transportation or storage. If any of the above conditions are found, the product must not be used. Please contact the supplier promptly for resolution.

1.2 Product Structure and Nameplate

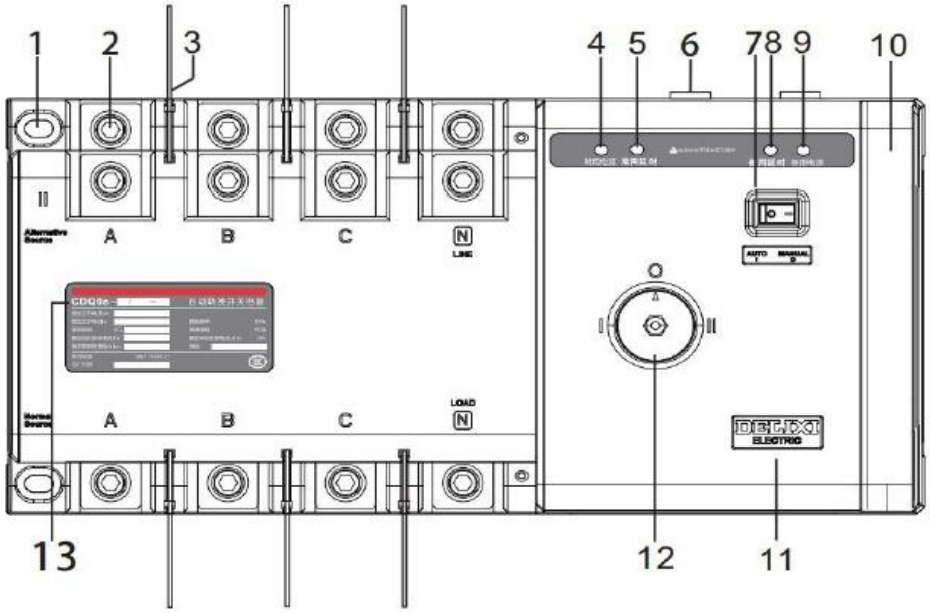

Figure 1 Product schematic diagram

Description:

1 – Mounting hole	6 – Secondary wiring terminals	11 – Company logo
2 – Power terminals	7 – Auto/Manual button	12 – Physical position indicator and handle insertion port
3 – Phase barrier	8 – Standby transfer delay adjustment port	
4 – Normal power status indicator	9 – Standby power status indicator	13 – Product model and parameter nameplate
5 – Normal transfer delay adjustment port	10 – Operating handle	

1.3 Features

The **CDQ0S** series automatic transfer switching equipment complies with GB/T 14048.11 and IEC 60947-6-1 standards. It is mainly used in AC 50 Hz/60 Hz power supply systems with rated operating voltage of 400 V/230 V and rated operating current of 250–800 A, enabling automatic (automatic transfer and automatic return) or manual switching between the normal power supply and standby power supply.

a) Main contacts with three positions (normal, standby, and dual OFF). The manual dual OFF function facilitates power-off maintenance of downstream circuits and also complies with the functional requirements for manual transfer switching equipment.

b) The G-type controller also supports utility/PV – utility/generator transfer functions;

c) This product adopts a design structure with top entry (power supply inputs on both sides) and bottom exit (load output on one side).

d) Except for the G-type controller (with dry-contact remote control), the product supports AC220V powered remote control and dry-contact remote control. Powered AC230V remote control is an optional function. When this option is selected, the dry-contact remote control function is no longer available.

1.4 Product Model and Meaning

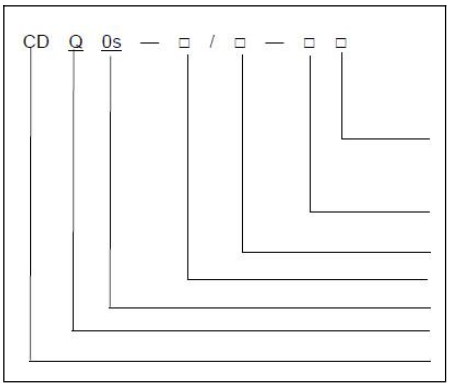

1.5 Main Technical Parameters

Main technical parameters are shown in Table 2:

Table 2 Main technical parameters

Parameter \ Model	CDQ0s-400	CDQ0s-800	
Rated current (A)	250，315，350， 400	400，500，630	700，800
Utilization category	AC-33iB	AC-33iB	AC-32B
Number of poles	3P/4P		
Rated short-time withstand current Icw	10kA/70ms	16kA/ 60ms	16kA/60 ms
Rated short-circuit making capacity Icm	17kA	32kA	32kA

Rated operational voltage Ue (V)	400±20%			
Frequency (Hz)	50/60			
123Rated insulation voltage Ui (V)	1000			
Rated impulse withstand voltage Uimp (kV)	8			
Electrical class	PC			
Applicable standards	GB/T 14048.11		IEC 60947-6-1	
Transfer time (s)	CDQ0s-400	1s±0.15s（P）	1.6s±0.15s（G）	
	CDQ0s-800	1s±0.15s (P)	1.6s± 0.15s(G)	
Power interruption time (s)	CDQ0s-400	0.55s±0.15s	CDQ0s-800	0.45s± 0.15s
EMC class	Environment B			
IP rating	IP30 (terminals are IP00)			

2 Storage and Transportation

a) During transportation and installation, handle with care. Do not invert the product, and avoid severe impact and vibration. The free-fall height during transportation shall not exceed 400 mm;

b) The product shall not be directly exposed to rain, snow, or prolonged direct sunlight;

c) Ambient temperature shall be between -25°C and +70°C, and the relative humidity of the air shall not exceed 90%.

3 Installation

3.1 Normal Operating and Installation Conditions

a) The ambient air temperature shall not exceed +50°C, and the average temperature within 24 hours shall not exceed +35°C.

The lower limit of ambient air temperature is -5°C;

b) The altitude of the installation site shall not exceed 2000 m;

c) When the maximum temperature is +50°C, the relative humidity of the air shall not exceed 50%. Higher relative humidity may be permitted at lower temperatures, for example, up to 90% at +20°C. Special measures shall be taken for occasional condensation caused by temperature changes;

d) Pollution degree: Degree 3, with conductive pollution or dry non-conductive pollution becoming conductive due to condensation;

e) Installation category: Category IV, with horizontal power input terminals;

f) Environment category B, in locations without rain or snow exposure and without significant vibration.

3.2 Appearance and Installation Dimensions

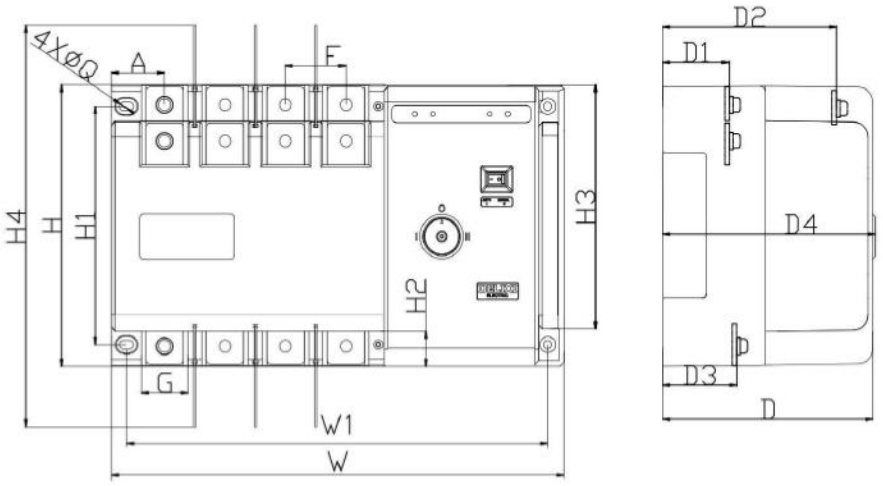

Figure 3 CDQ0S400-800/3P, 4P main body dimensions

Table 3 Overall and installation dimensions of the switch body

Model / Specification	W	W1	H	H1	A	F	G	H2	H3	H4	D	D1	D2	D3	D4	Q
CDQ0S-400/4P	454	421	220	190	51	58	40	27.5	219	320	186	66	156	66	189	9
CDQ0S-400/3P	454	421	220	190	51	58	40	27.5	219	320	186	66	156	66	189	9
CDQ0S-800(315-630)/4P	488	454	296	250	57	65	50	37	256	415	226	79.5	187	79.5	229	9
CDQ0S-800(315-630)/3P	488	454	296	250	57	65	50	37	256	415	226	79.5	187	79.5	229	9
CDQ0S-800(700-800)/4P	488	454	296	250	57	65	50	37	256	415	226	81.5	189	81.5	229	9
CDQ0S-800(700-800)/3P	488	454	296	250	57	65	50	37	256	415	226	81.5	189	81.5	229	9

3.3 Product Wiring Diagram

Normal power supply Standby power supply

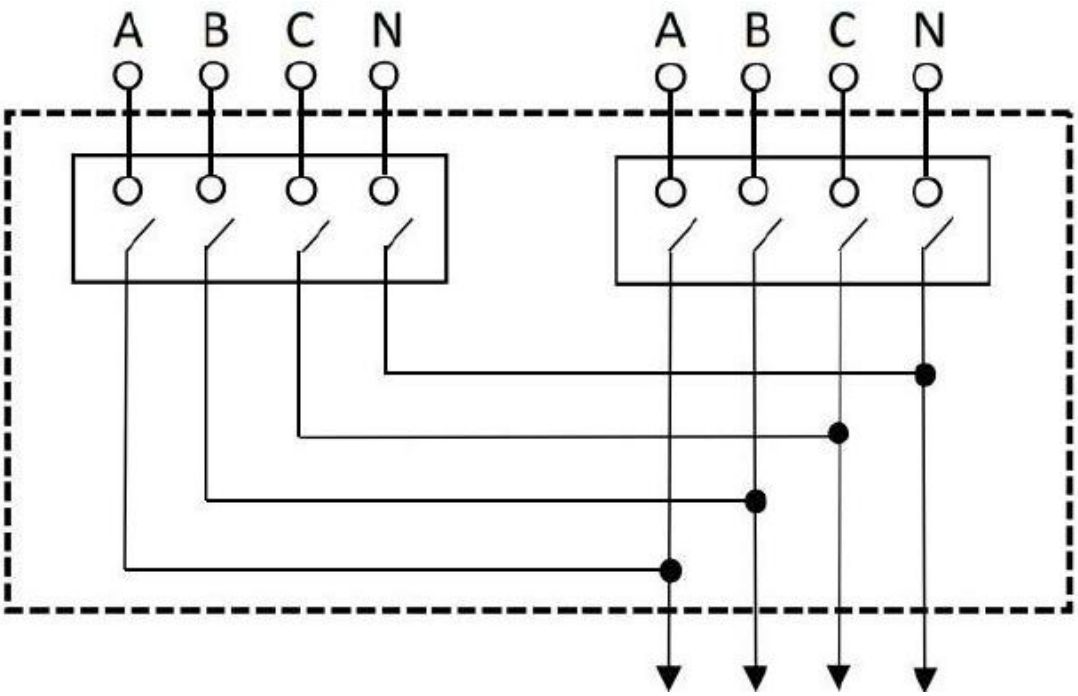

4P wiring diagram

Normal power supply Standby power supply

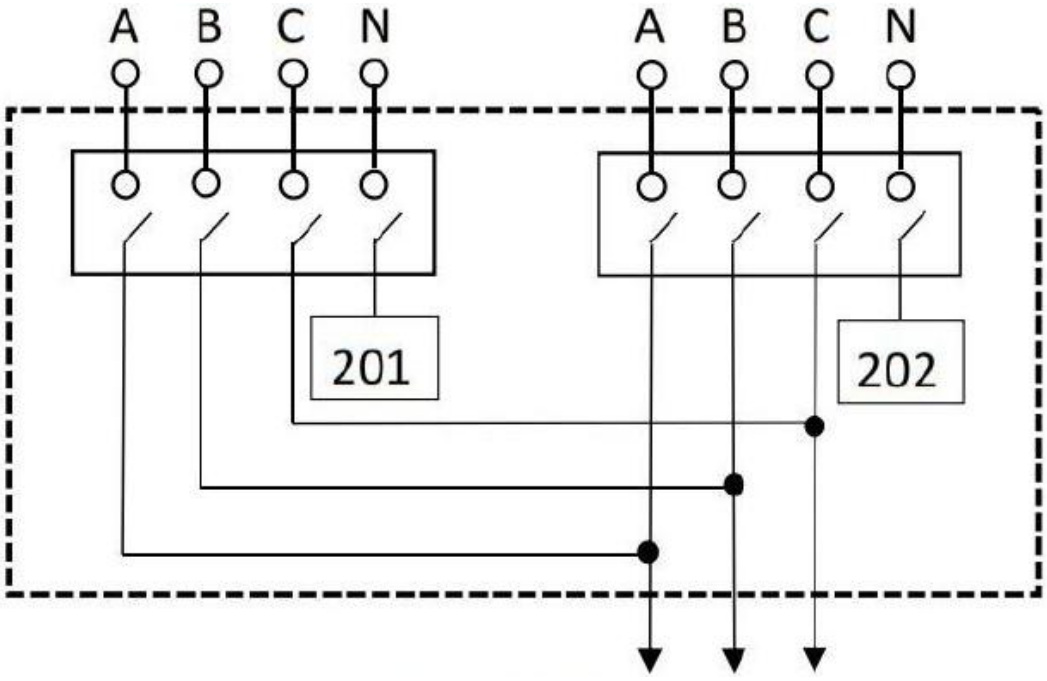

3P wiring diagram

Figure 4 Product wiring diagram

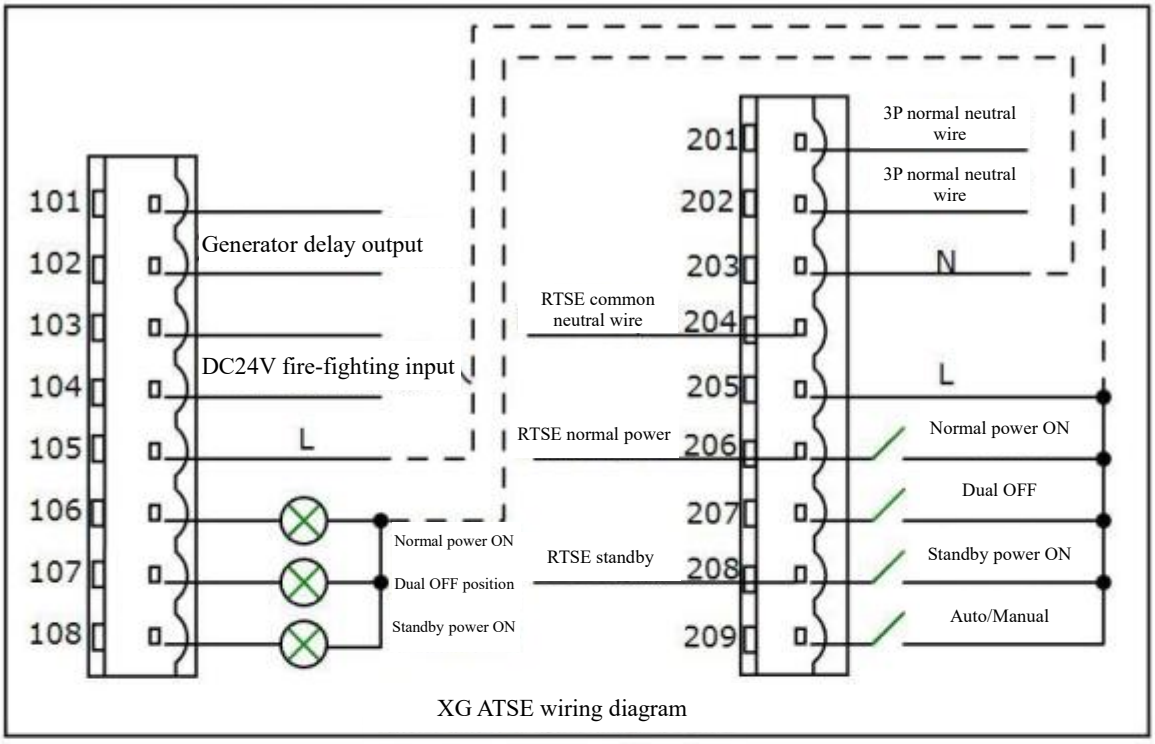

XG ATSE wiring diagram

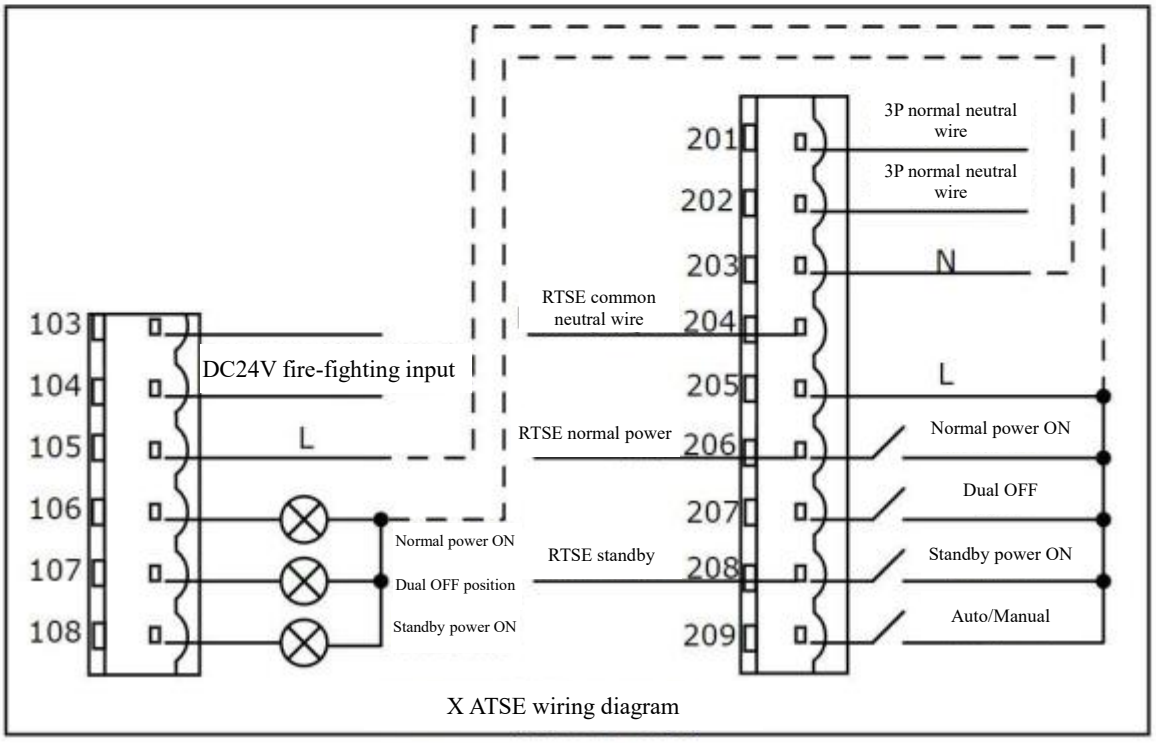

X ATSE wiring diagram

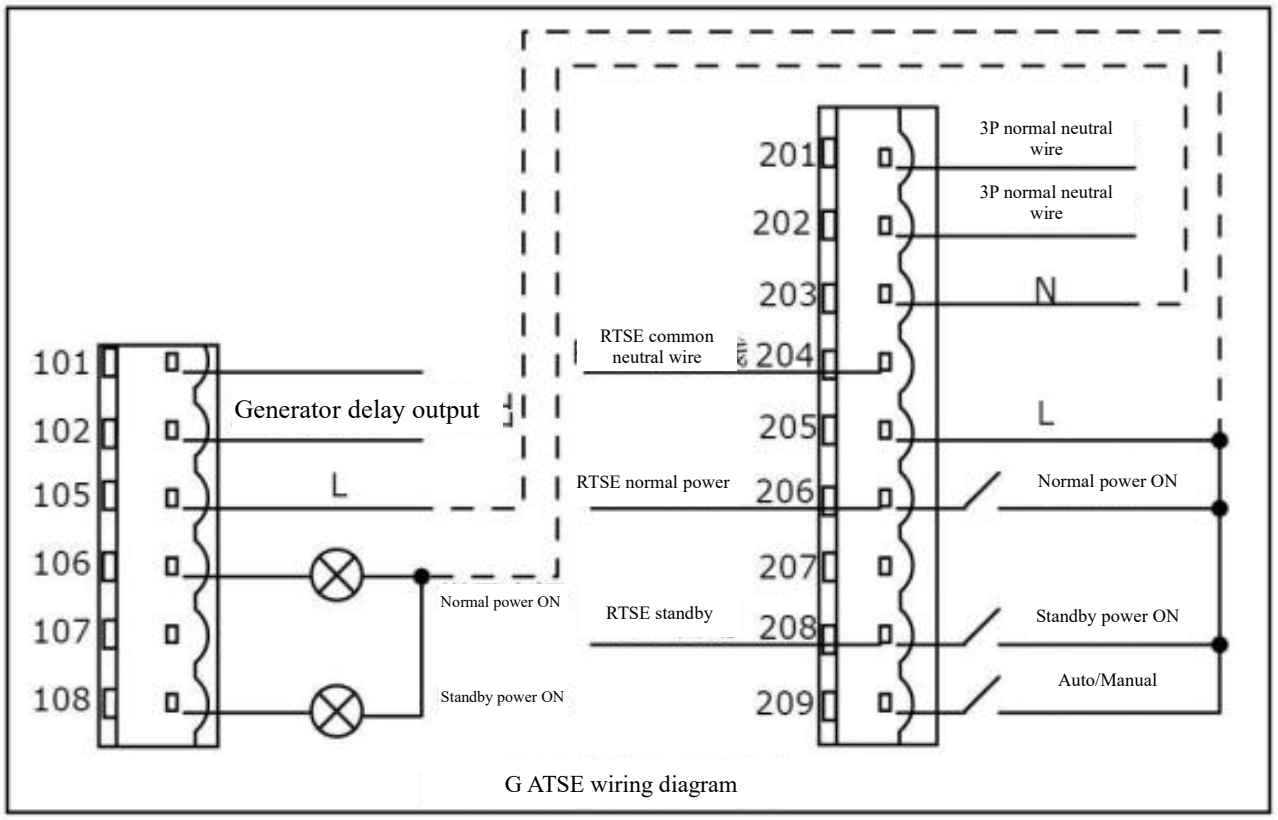

G ATSE wiring diagram

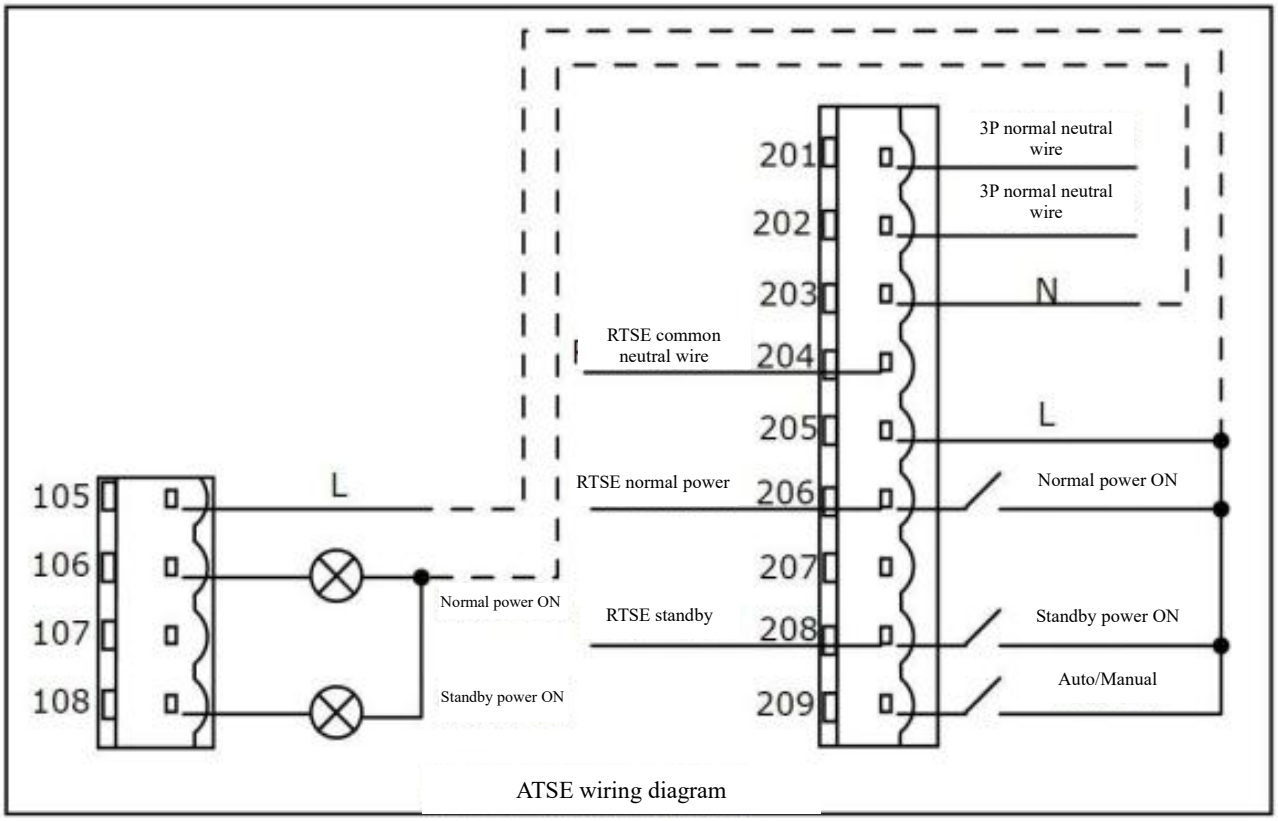

ATSE wiring diagram

Figure 5.1 Secondary terminal wiring diagram

101, 102: Generator start signal output (dry contact): When the normal power supply is abnormal, a closed dry-contact signal will be output. The output will be turned off 15 s after normal power recovery.

103, 104: DC24V fire-fighting signal input

105: Position indication power input terminal (during use, the L power supply can be taken from 205 as indicated by the dashed line).

106, 107, 108: Position indication (dry-contact output; during use, the N power supply can be taken from 203 as indicated by the dashed line).
201, 202: Neutral wire connection points for normal and standby power of 3P products.
203: Neutral wire output point (when using position indication, the neutral wire can be led out from here).
204: Remote-control common neutral wire connection point (connect the neutral wire here during AC220V voltage signal remote control).
205: Live wire output point (when using position indication, the live wire can be led out from here).
206: Normal power ON command input (short-circuiting 205 and 206 enables dry-contact remote control for normal power ON; inputting AC220V between 204 and 206 enables powered remote control for normal power ON).
207: Dual OFF command input (dry-contact short-circuiting 205 and 207 enables dual OFF). Supported only by X ATSE and XG ATSE.
208: Standby power ON command input (short-circuiting 205 and 208 enables dry-contact remote control for standby power ON; inputting AC220V between 204 and 208 enables powered remote control for standby power ON).
209: Short-circuiting 205 and 209 indicates that the product has selected the automatic transfer and automatic return function. Regardless of which RTSE function is selected, the short-circuit connection between 205 and 209 must be disconnected before the product can be remotely controlled normally.
Note: When using the powered AC220V RTSE function, ensure that the N and L wires are connected correctly. For the RTSE function, only one type of signal may be selected between powered signals and dry-contact signals, and only one signal command may be input at a time (either normal power ON or standby power ON). G-type and XG-type products only support dry-contact RTSE functions and do not support powered (AC220V RTSE) functions.

3.4 User Installation Instructions

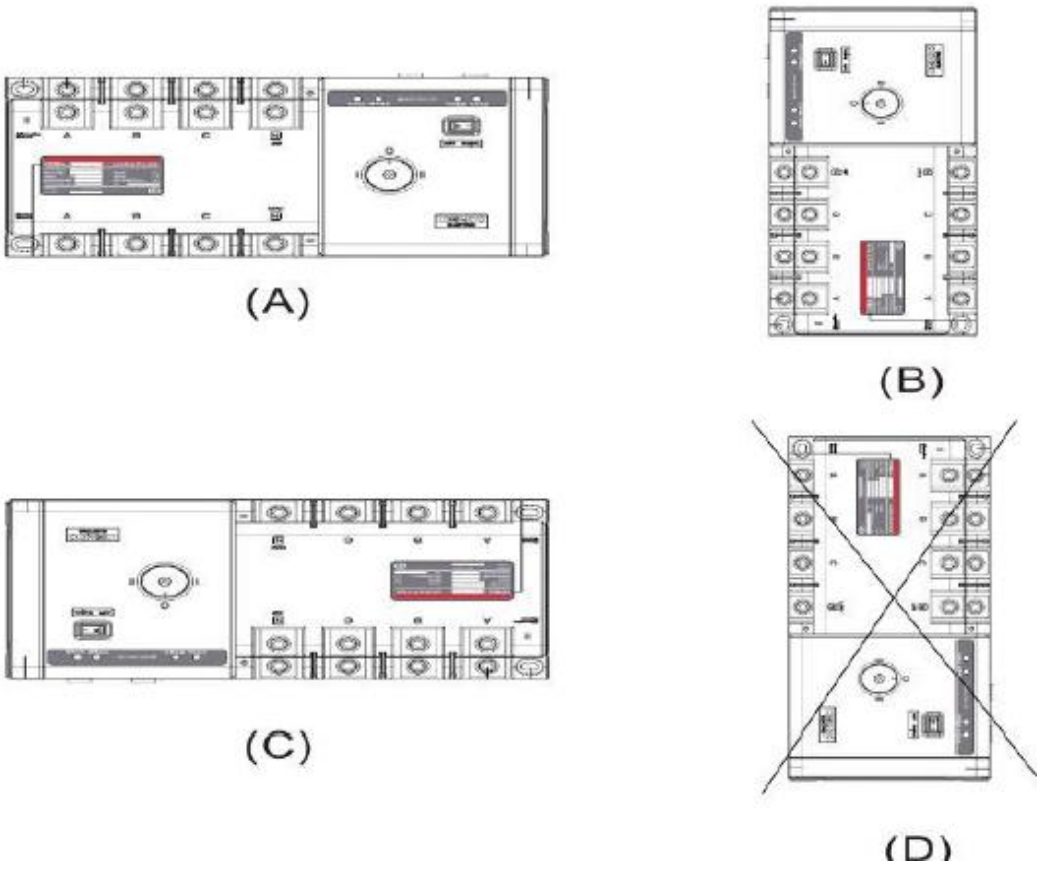

(A)(B)(C) Correct (D) Incorrect

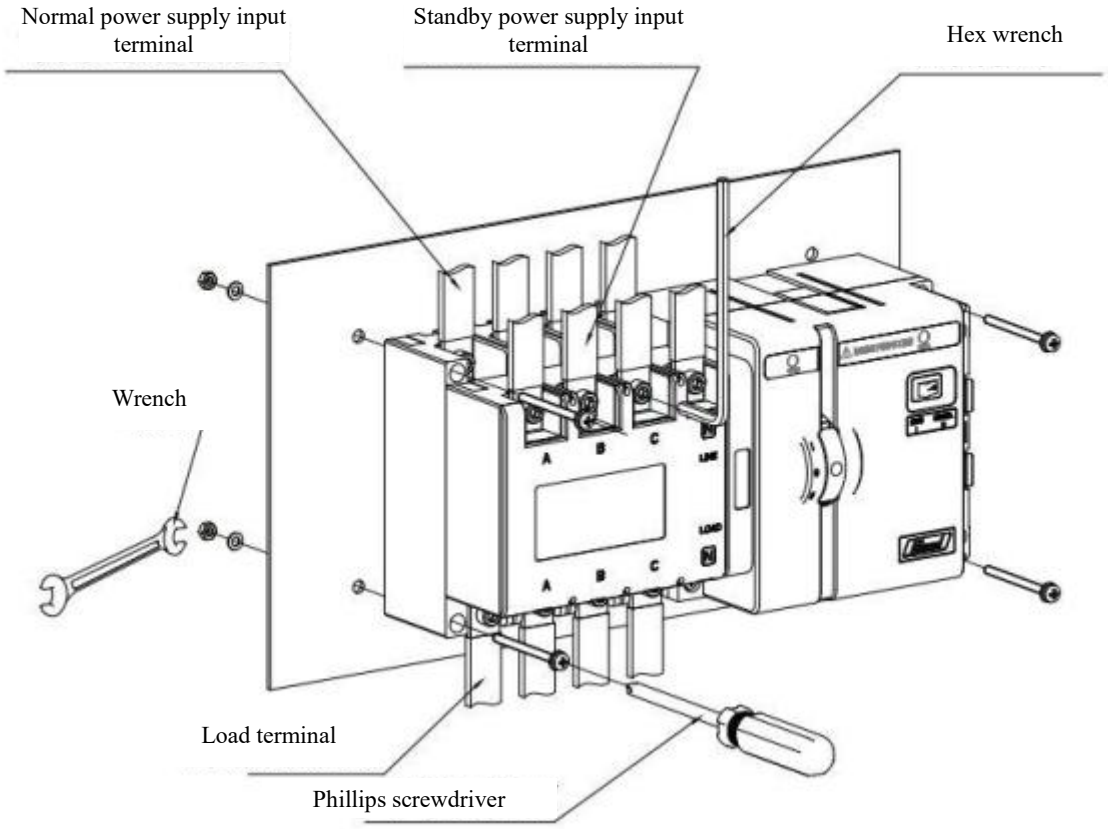

Figure 6 CDQ0S 80~800 Normal power supply, standby power supply, load-side wiring, and product installation

Table 4 Torque table

Frame size	Phillips mounting screw		Hex socket terminal screw	
	Specification	Torque N·m	Specification	Torque N·m
CDQOs-400	M8*60	9.5	M10*20	15~18
CDQ0s-800	M8*120	10.5	M12*25	26~30

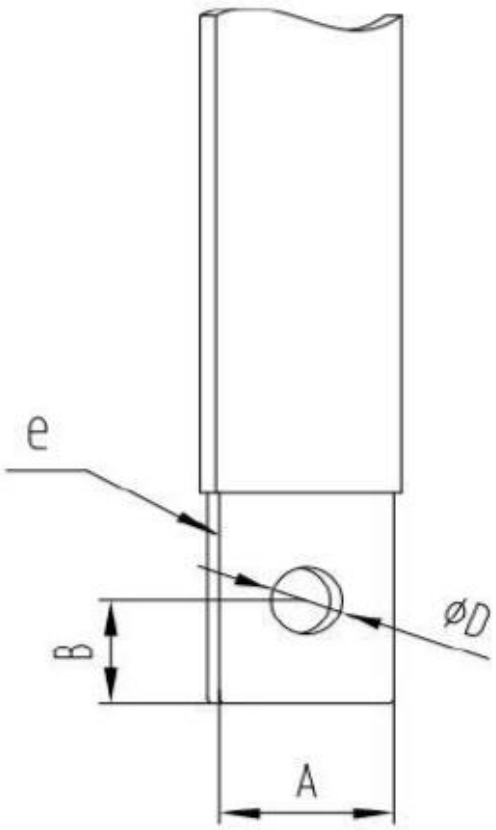

Figure 7 Copper busbar specifications

Table 5 Recommended copper busbar and conductor specifications (mm)

Model/ Specification	A	B	e	φD
CDQ0s-400	30	14	3.5	11
CDQ0s-800	40	20	5(630A)	13
	40	20	7	13

3.5 Safety Clearance

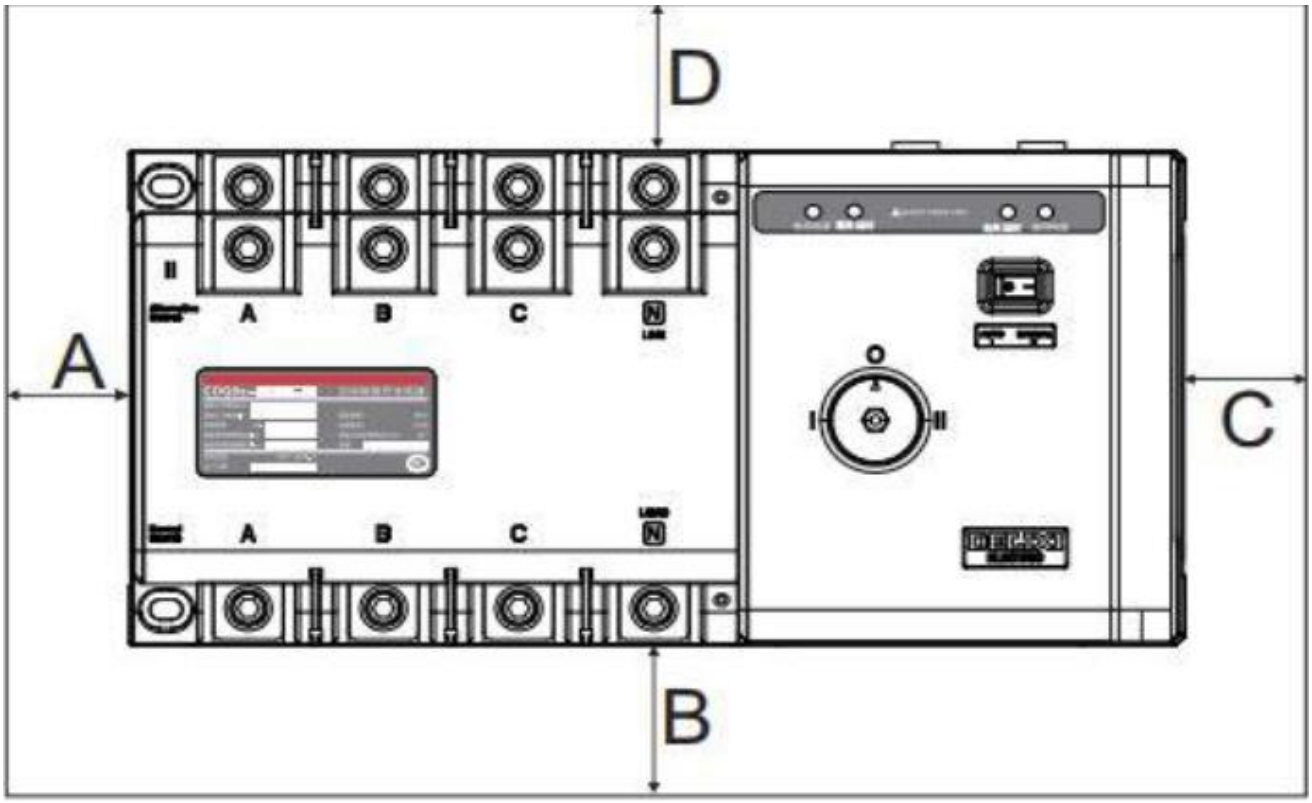

Figure 8 Safety clearance

Table 7 Safety clearance

Safety clearance (mm)	A	B	C	D
Insulation	0	60	0	60
Metal/live conductor	0	70	0	70

3.6 Handle Operating Range

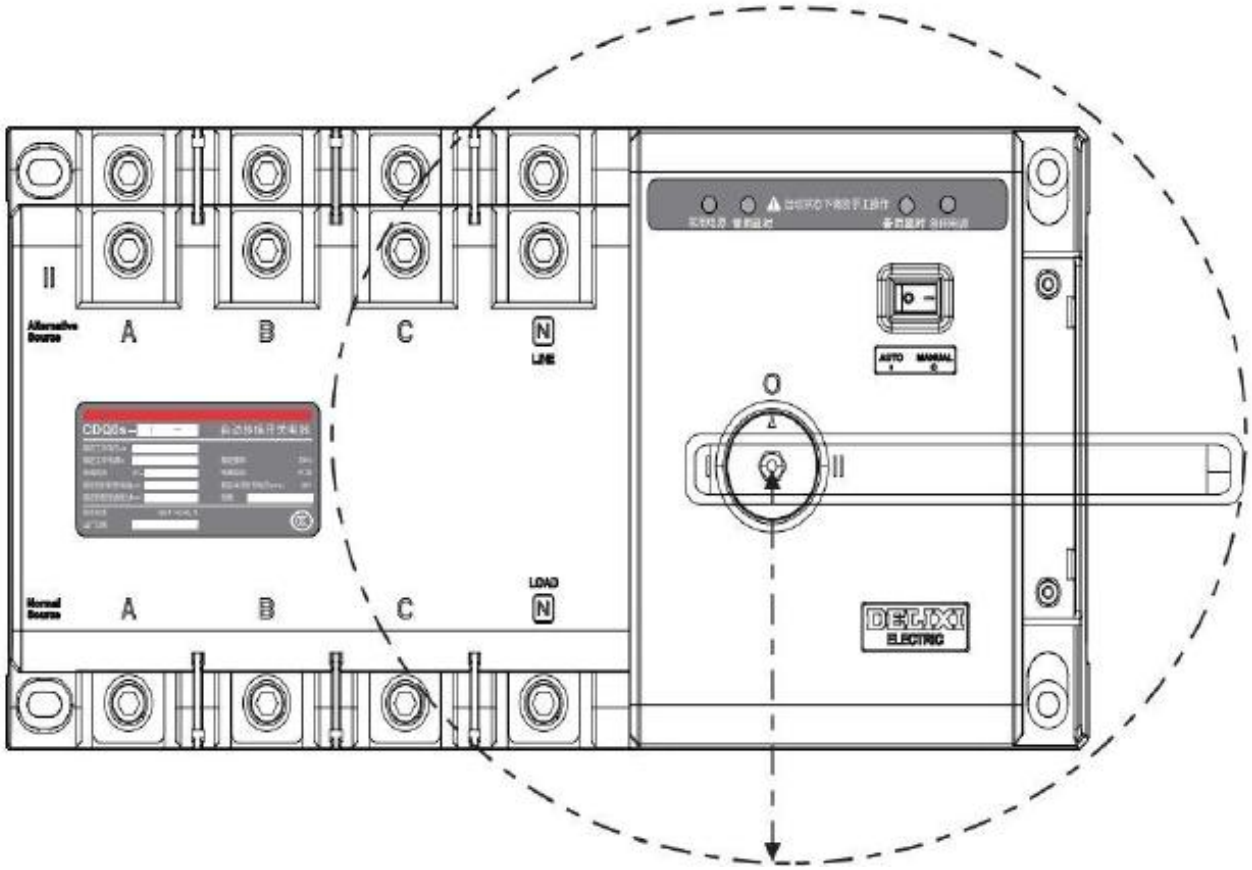

Maximum handle rotation radius range D = 195 mm

CDQ0s400-800

Figure 9 Handle operating range

Note: No obstruction is allowed within the handle operating range.

4 Operation and Commissioning

4.1.1 Description of Automatic Switch Transfer Operation Sequence

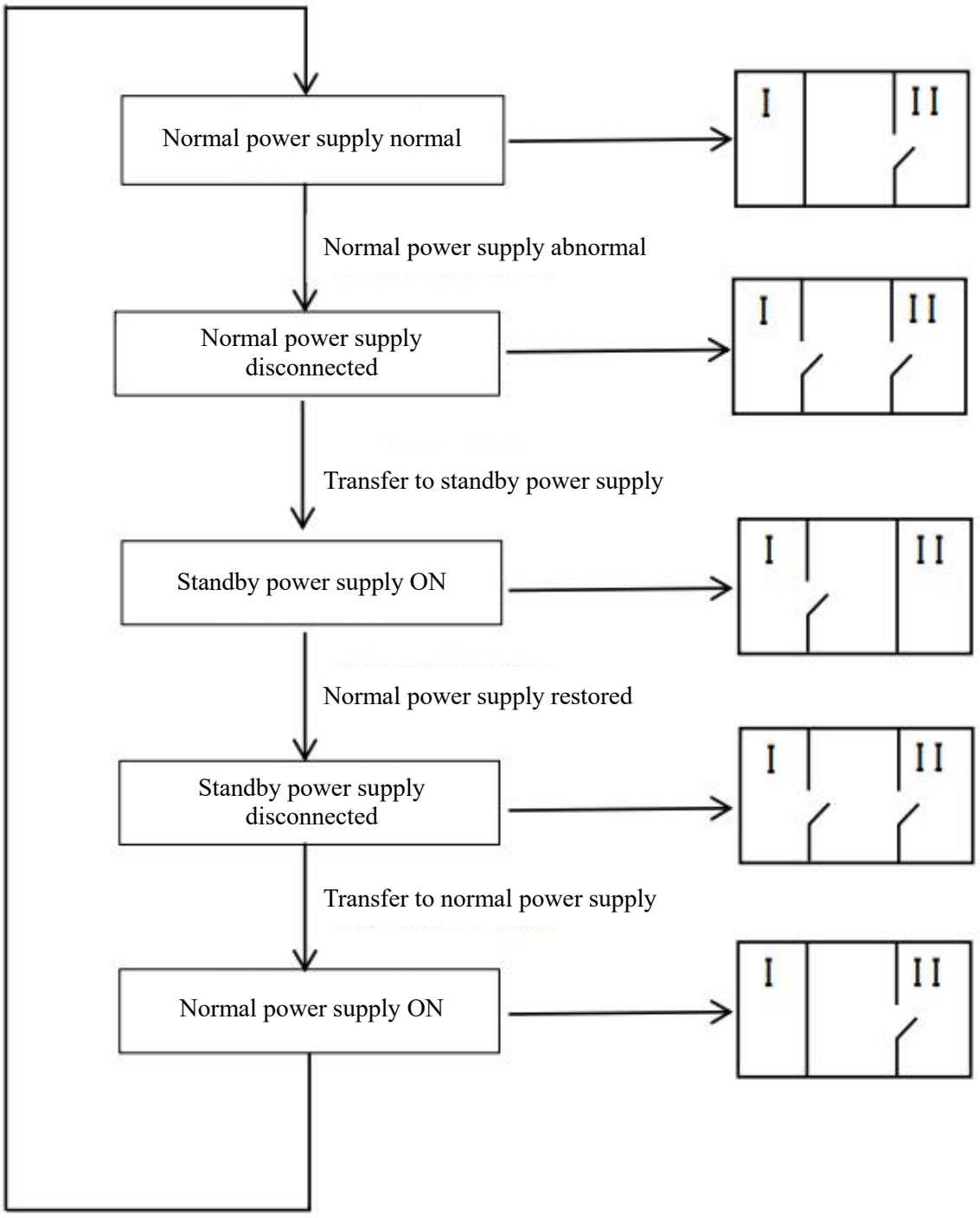

Figure 10 ATSE **P-type controller operation flowchart**

4.1.2 Description of automatic Switch Transfer Operation Sequence (G-type Controller)

Adjustable range of normal transfer delay: 0–30s

Adjustable range of standby transfer delay: 0–30s

The delay adjustment knob provides stepless adjustment, and the scale markings are for reference only.

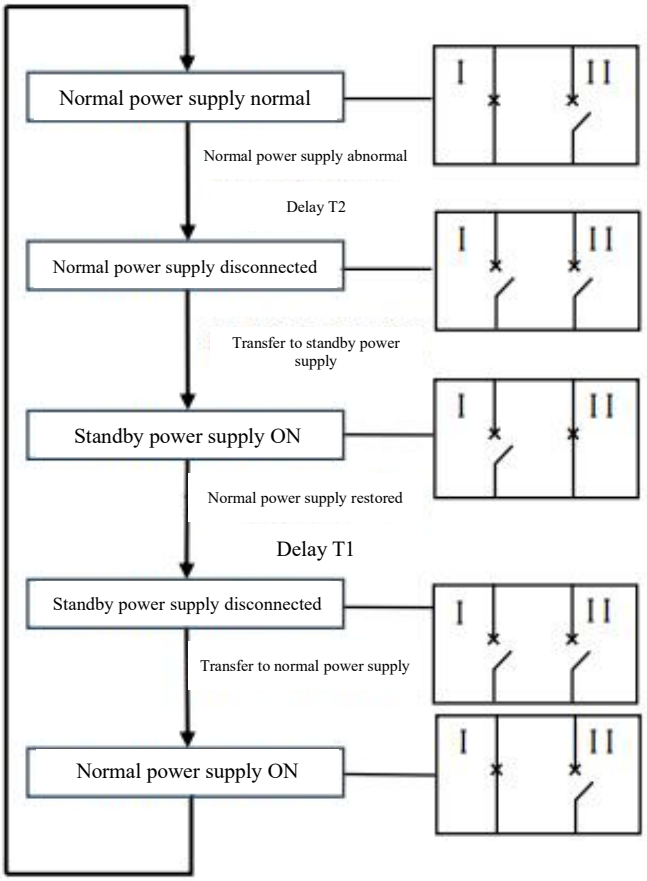

T1: Normal transfer delay, from normal power supply restoration to position I closing time.
T2: Standby transfer delay, from standby power supply restoration to position II closing time.
T3: Generator stop delay, from normal power supply restoration to the output of the generator stop signal.

I: Normal power supply.
II: Standby power supply.
Note: T3 is fixed at 15s ±1s.

Figure 11 Utility-to-utility automatic return (automatic transfer and automatic return) flowchart

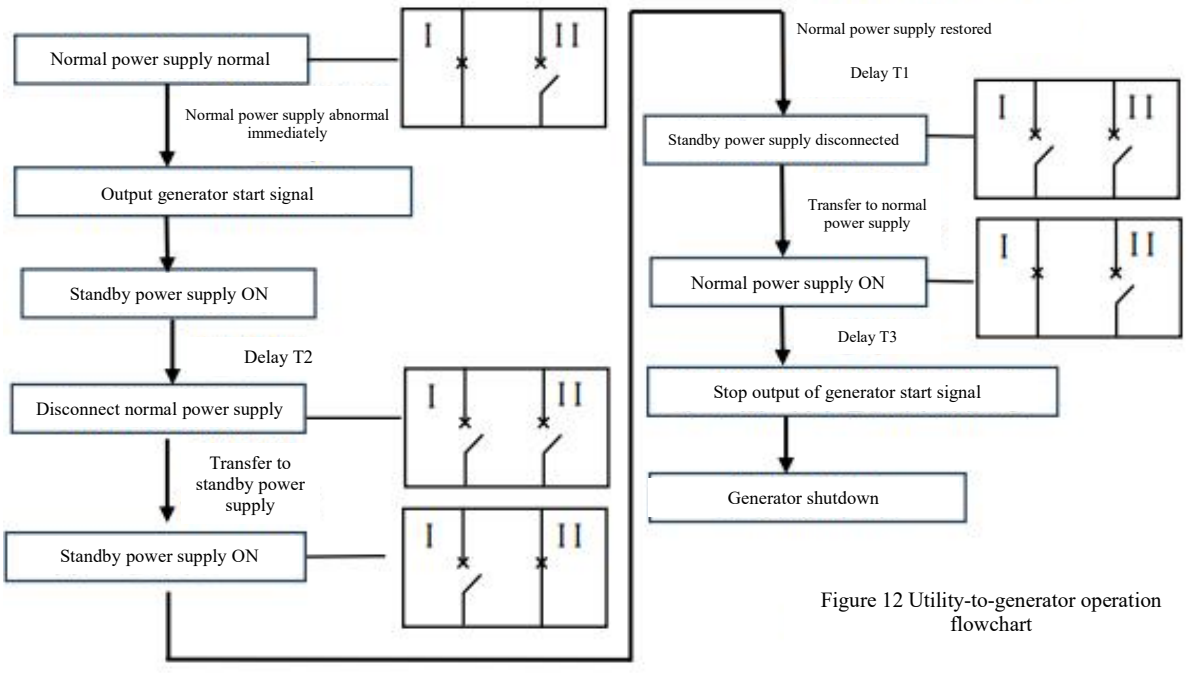

Figure 12 Utility-to-generator operation flowchart

4.2 Operating Modes

a) Automatic operation: Automatic transfer mode controlled by the controller. The controller automatically detects power loss and phase loss of the two power supplies (G-type controller additionally supports related functions) to realize automatic power transfer.

b) Manual operation: Manual transfer by operating handle. Press the [Auto/Manual Button] on the switch panel to switch to manual mode (manual button in the "O" position), then remove the operating handle from the main body, insert it into the handle rotation slot on the main body, press the handle fully into place, and rotate it to the required power position. After manual operation, be sure to remove the operating handle and return it to its original position.

Note: MTSE has no transfer button and can only be operated manually.

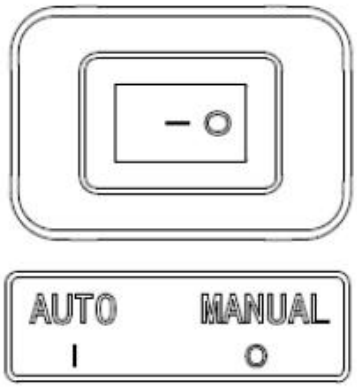

Figure 13 Auto/Manual button diagram

4.3 Precautions for Use

In addition to the "Danger" and "Caution" items on the first page, the following conditions shall also be noted:

a) This product can operate reliably at rated voltage (80%–120%) Ue. During installation and wiring, strictly distinguish the input/output terminals and the N phase. The neutral line must not be shared;

b) It is strictly prohibited to use this product beyond normal operating conditions, such as in environments with continuous moisture or condensation without corresponding protective measures, environments with flammable or corrosive dust, expected short-circuit current beyond the specified range, excessively high or low voltage, current exceeding the rated current, excessively high altitude, etc.;

c) This product adopts a molded-case insulated structure design and does not require grounding.

d) If the protective device trips due to a line or load fault, the fault shall be eliminated first before energizing the load.

e) During use, the product shall be inspected regularly, for example every three months of operation, and manually transferred once to check whether it operates normally.

5 Troubleshooting

Common fault analysis of automatic transfer switching equipment is shown in Table 10:

Table 10 Troubleshooting

Symptom	Cause Analysis	Solution
Product does not transfer automatically (under fault or commissioning conditions)	1. Faulty connection between the power line and the switch body; 2. Auto/Manual button is in manual mode; 3. N pole input terminal of 3P product is not connected.	1. Check whether the power line is properly connected and whether the bolts are tightened; 2. Check whether the Auto/Manual button is in automatic mode; 3. Maintain the on-site power grid conditions; 4. Connect the N pole.

6 Company Commitment

Provided that the user complies with the conditions for use and storage and the product seal remains intact, if the product is damaged or cannot operate normally due to manufacturing quality issues within 36 months from the date of manufacture, the company shall repair or replace it free of charge. After the warranty period, repairs shall be charged. However, damage caused by any of the following circumstances shall be repaired at cost even within the warranty period:

a) Improper use, maintenance, or storage;

b) Unauthorized modification or improper repair;

c) Damage caused by dropping after purchase or during installation;

d) Force majeure such as earthquake, fire, lightning strike, abnormal voltage, and secondary disasters.

Please contact the distributor or our customer service department for any questions.

DELIXI® ELECTRIC

Certificate of Conformity

Name: Automatic transfer switching equipment

Model: CDQ0S

This product has passed inspection and is approved for shipment.

Applicable standard: GB/T 14048.11

Inspector: Inspection 06

Date of manufacture: See inner box label

Delixi Electric Ltd.

Delixi Electric Ltd.
Delixi High-Tech Industrial Park, Liushi Town, Yueqing City, Zhejiang Province, P.R. China Postal code: 325604
Tel: (86-577) 61778888
Fax: (86-577) 61778000
Customer Service Hotline: 400-826-8008
www.delixi-electric.com
First Edition of This Manual: January 2025