DELIXI®
ELECTRIC
德力西电气

CDQ0s Automatic Transfer Switching Equipment

User Manual



□ Please read the product instructions carefully before the installation and operation of the product, and keep those instructions properly for reference later

Safety Notice

Please carefully read this manual before the installation, operation, run, maintenance, and inspection of the product, and install and operate this product properly according to the product instructions.

⚠ **Danger:**

- It is prohibited to operate the automatic transfer switching equipment with your wet hands;
- It is prohibited to touch the conductive part during operation;
- Make sure that the product is de-electrified during the maintenance and repair;
- It is prohibited to use the short circuit method to test the product;
- Please remove the manual operating handle during the automatic operation.

⚠ **Caution:**

- The installation, maintenance and repair shall be carried out by professionally qualified personnel;
- The product should be installed, debugged and operated according to the product instructions;
- Please confirm that the operating voltage, rated current, frequency and characteristics of the product meet the working requirements before use;
- When installation, please distinguish the normal input terminal, spare input terminal and output terminal, otherwise it may cause a short circuit accident;
- When installation, please ensure that the phase sequence of the normal power supply must be consistent with that of the spare power supply, otherwise it may cause the reverse rotation of the load motor located at the lower end;
- Regardless of the three-pole or four-pole product, the zero line must be connected to the N pole at the input terminal, and it is strictly forbidden to share the N pole, otherwise it will make the electric leakage protection product work;
- In order to prevent interphase short circuit, a phase partition shall be provided for the copper busbars at the incoming and output terminals for isolation (no phase partition is required for 2P products);
- The undervoltage under working condition is not less than 195.5V (phase voltage), otherwise the product may not be switched normally;
- Do not operate the product manually in the Auto mode, otherwise the automatic transfer switching equipment will be reset to the original position;
- Before manual operation, the product must be in the Manual mode (the Auto/Manual button is in the O position) and the matched handle is used. The manual operation can realize the closing, spare closing, and dual-opening functions;
- To test the insulation resistance or power frequency withstand voltage, please disconnect the electronic components (including the controller) between the current circuits, otherwise it may cause damage to the performance of the product;
- When scrapping the product, please dispose the product waste properly. Thanks for your cooperation.

Table of Contents

1 About the CDQ0s automatic transfer switching equipment 1
1.1 Packing List 1
1.2 About Product Structure and Nameplate 1
1.3 Product Features 2
1.4 Product Model and Its Meanings 2
1.5 Main Technical Parameters of the Product 2
2 Storage and Transportation 3
3 Installation 3
3.1 Normal Working Conditions and Installation Conditions 3
3.2 Outline and Installation Dimensions 4
3.3 Product Wiring Diagram 5
3.4 User Installation Instructions 6
3.5 Safety Distance 7
4 Operation and Debugging 8
4.1 Description of Automatic Switching Action Process of Switch 8
4.2 Operation Method 8
4.3 Handle Installation and Use Instructions 9
4.4 Description of Indicator Display 9
4.5 Precautions During Operation 10
5 Troubleshooting 10
6 Company's Commitments 11

1 About the CDQ0s automatic transfer switching equipment

1.1 Packing List

No.	Name	Unit	Qty.
1	Automatic transfer switching equipment	Unit	1
2	Handle	Pcs	1
3	Mounting screw, nuts, and flat gasket	Bag	1
4	Manual	Copy	1
5	Phase partition	Sheet	2P: No; 3P/4P: 6 sheets

After unpacking, the user must check the product for damage, the exposed metal for rust, and the product for any defects caused by poor transportation or storage. If found the above phenomenon, please stop the product, and contact the supplier timely for this.

1.2 About Product Structure and Nameplate

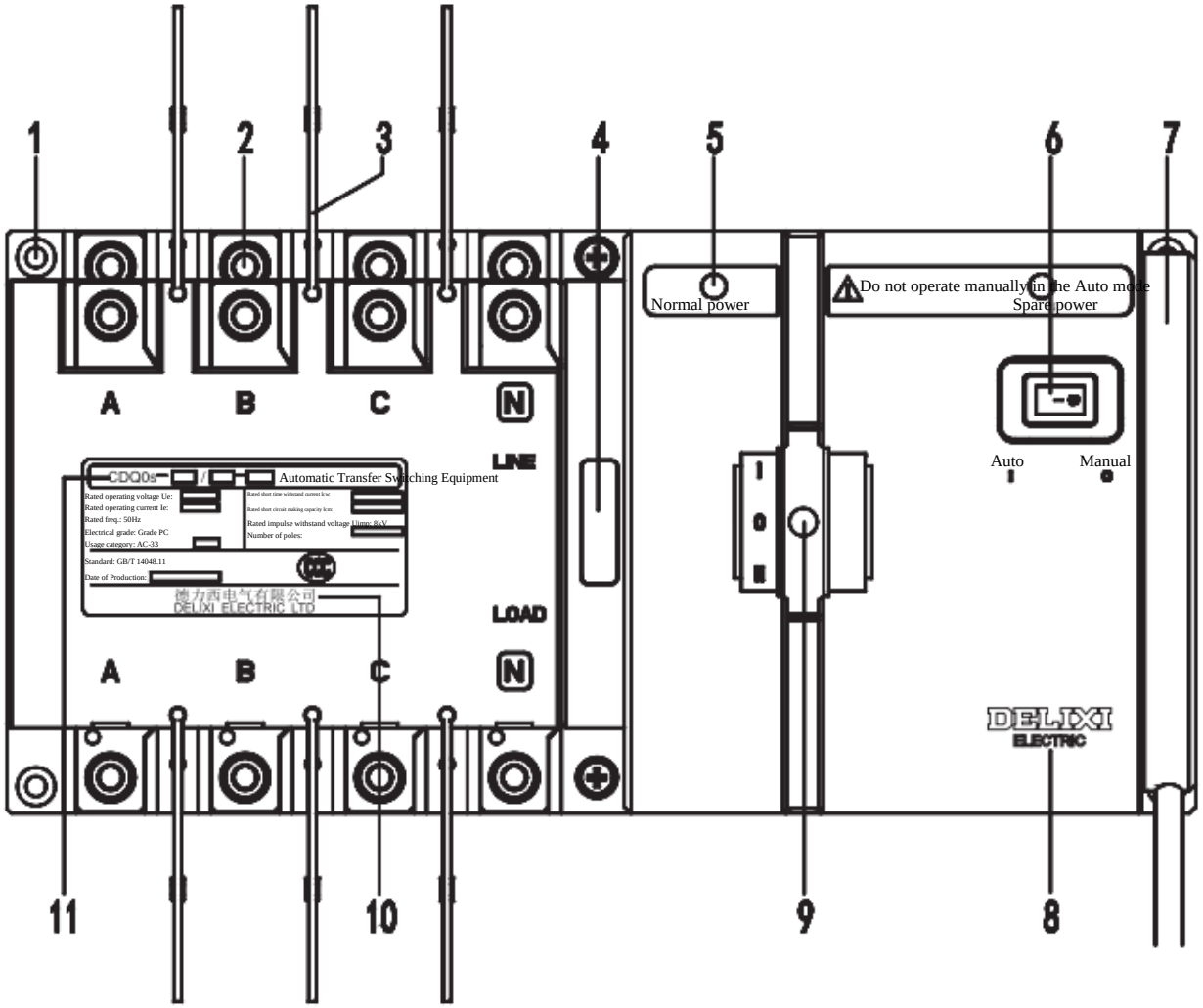

Fig. 1 Product schematic diagram

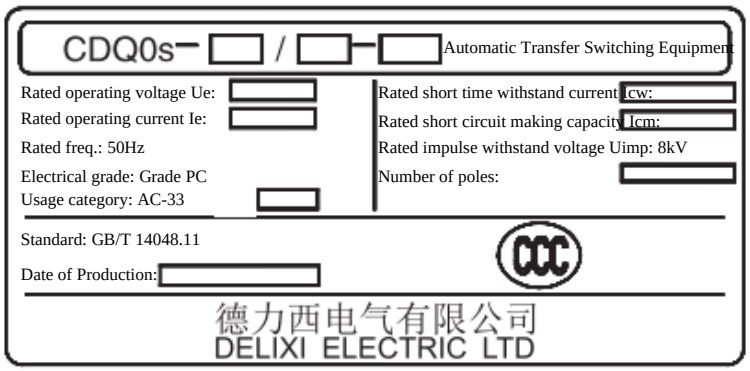

Fig. 2 Product nameplate

Legends:

1 – Mounting hole	2 – Power end	3 - Phase partition
4 – Switching position indicator window	5 – Indicator	6 – Auto/Manual button
7 – Operating handle	8 – Company logo	9 Operating handle hole
10 – Company name	11 Product model	

1.3 Product Features

CDQ0s series automatic transfer switching equipment complies with the GB/T 14048.11 standard, and it is primarily used in the AC 50Hz power supply system with the rated operating voltage 400V and the rated operating current ranged 10~250A to switch between the normal power supply and the spare power supply automatically (automatic transfer automatic recover) / manually.

a) There are three positions (Normal, Spare, and Dual-Open) for main contacts, and the manual dual-opening function is used to cut off the power for convenient maintenance and repair of the subordinate circuit, and meets the functional requirements of MTSE (manual transfer switching equipment).

b) The usage category conforms to AC-33iB and has AC-33B parameters;

c) This product adopts the design structure of upper inlet (power inlet on both sides) and lower output (load outlet on one side).

1.4 Product Model and Its Meanings

CD Q 0s □ / □ −□ □ □

- Default: No fire protection function; X: With fire dual-open function
- Default: No external indicator terminal; D: With external indicator terminal
- Rated current (A): 10, 16, 20, 25, 32, 40, 50, 63, 80, 100, 125, 140, 160, 200, 225, 250
- Number of poles: 2P, 3P, 4P
- Frame current: 80, 125. 250
- Design No.
- Automatic transfer switching equipment
- Enterprise code

1.5 Main Technical Parameters of the Product

The main technical parameters are listed in Table 2:

Table 2 Main technical parameters

Parameter \ Model	CDQ0s-80		CDQ0s-125		CDQ0s-250	
Rated current (A)	10，16，20，25，32，40	50，63，80	40，50，63	80，100，125	63，80，100，125，140	160，200，225，250
Usage category	AC−33B	AC−33iB	AC−33B	AC−33iB	AC−33B	AC−33iB

Table 2 Main technical parameters, continued

Parameter / Model	CDQ0s-80	CDQ0s-125	CDQ0s-250
Number of poles	2P 3P 4P		
Rated short time withstand current	5KA	10KA	10KA
Rated short circuit making capacity Icm (kA)	7.65KA	17KA	17KA
Rated operating voltage Ue	400V±15% (230V±15% for 2P product) 50Hz		
Rated insulation voltage Ui	AC800V		
Rated impulse withstand voltage Uimp	8kV (8kV for main circuit, 2.5kV for control circuit)		
Electrical grade	Grade PC		
Standard	GB/T 14048.11		
Power supply deviation being monitored	±10%		
Electromagnetic compatibility environment	Environment B		
Enclosure protection grade	IP30 (except for terminal block)		

2 Storage and Transportation

a) Please gently handle the product during transportation and installation, do not upside it down, and protect it to avoid violent collision and vibration; the free fall height during transportation should not exceed 400mm;

b) The product shall not be directly exposed to rain and snow and long-term direct radiation from the sun;

c) Ambient temperature: -25℃ to +70℃; the relative humidity of the air does not exceed 90%.

3 Installation

3.1 Normal Working Conditions and Installation Conditions

a) The ambient air temperature does not exceed +40℃, and the mean temperature within 24 hours does not exceed +35℃. The lower limit of ambient air temperature is -5℃;

b) The altitude of the installation site does not exceed 2000m;

c) When the maximum temperature is +40℃, the relative humidity of the air does not exceed 50%, and a higher relative humidity can be allowed at lower temperatures, such as 90% at +20°C. Special measures should be taken for condensation occurred occasionally due to temperature changes;
d) The pollution degree is Level 3, there is conductive pollution, or the dry non-conductive pollution becomes conductive due to condensation;
e) The installation category is Class IV, and the power supply inlet is horizontal;
f) Environment class B, installed in a place where there is no rain or snow attacks and there is no severe vibration.
3.2 Outline and Installation Dimensions

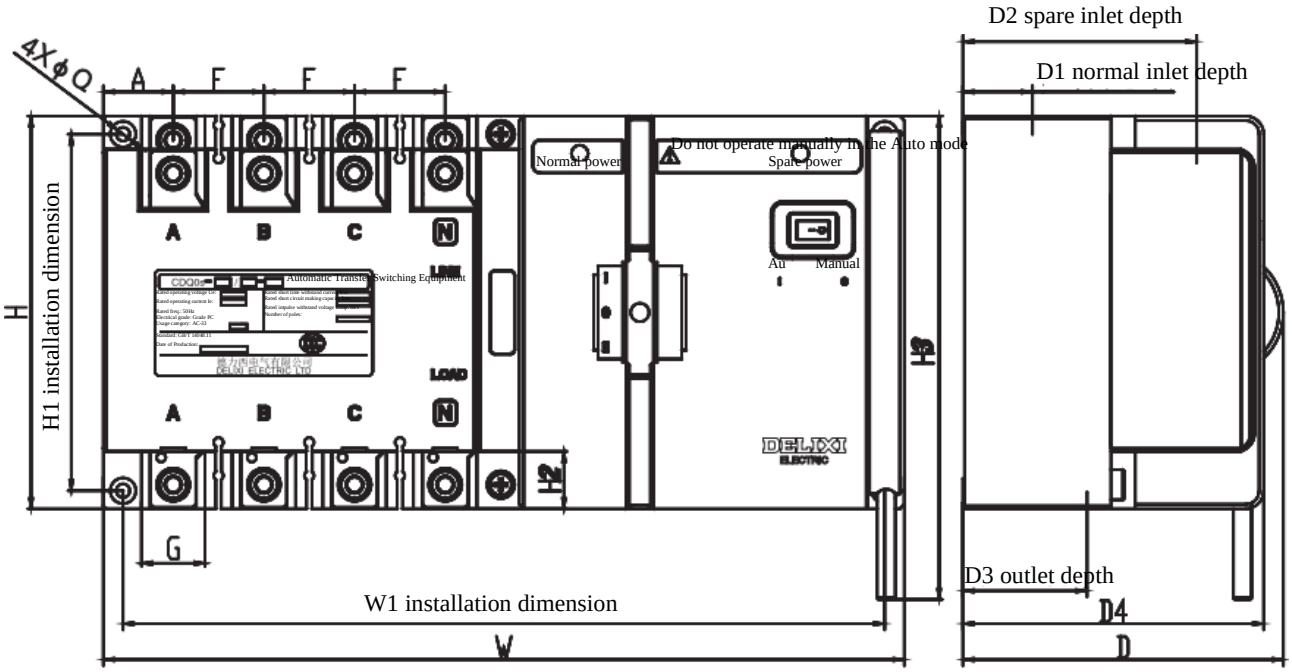

Fig. 3 CDQ0s80~ 250/2P, 3P, and 4P body outline

Table 3 Outline and installation dimensions of the switch body

Model / Spec.	W	W1	H	H1	A	F	G	H2	H3	D	D1	D2	D3	D4	Q
CDQ0s-80	245	232	120	97	21	25	17	15.5	155	100	24.5	63.5	40	91	4.5
CDQ0s-125	265	252	130	118	23	30	21.5	19	160	106	23	78	44.5	99.5	4.5
CDQ0s-250	340	325	170	155	31.5	40	30.5	25	210	137	27	97	54.5	122.5	5.5

3.3 Product Wiring Diagram

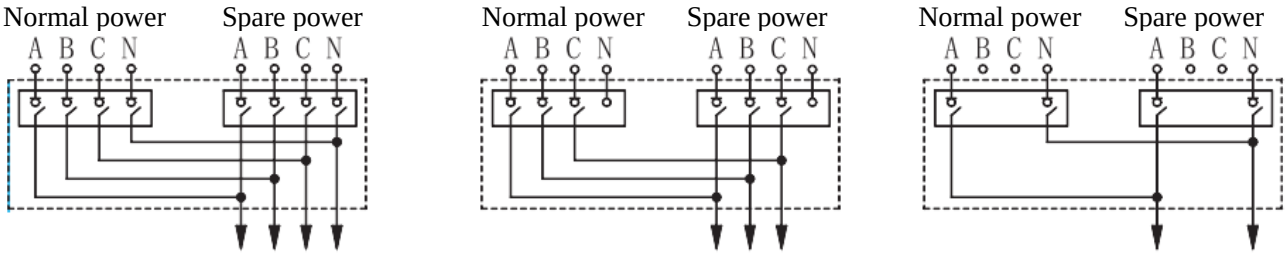

4P wiring diagram　　3P wiring diagram　　2P wiring diagram

Fig. 4 Product wiring diagram

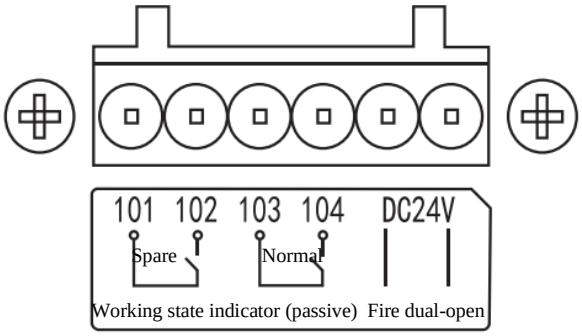

Wiring diagram of the terminal block of the secondary circuit

101/102 Standby closing indicator (passive)
103/ 104 Normal closing indication (passive)
Fire dual-open / DC24V input

Terminal definition

(Note: Closing indication and fire dual-open terminal are optional functions; for details, refer to the practical product instructions)

Fig. 5 Secondary terminal wiring diagram

3.4 User Installation Instructions

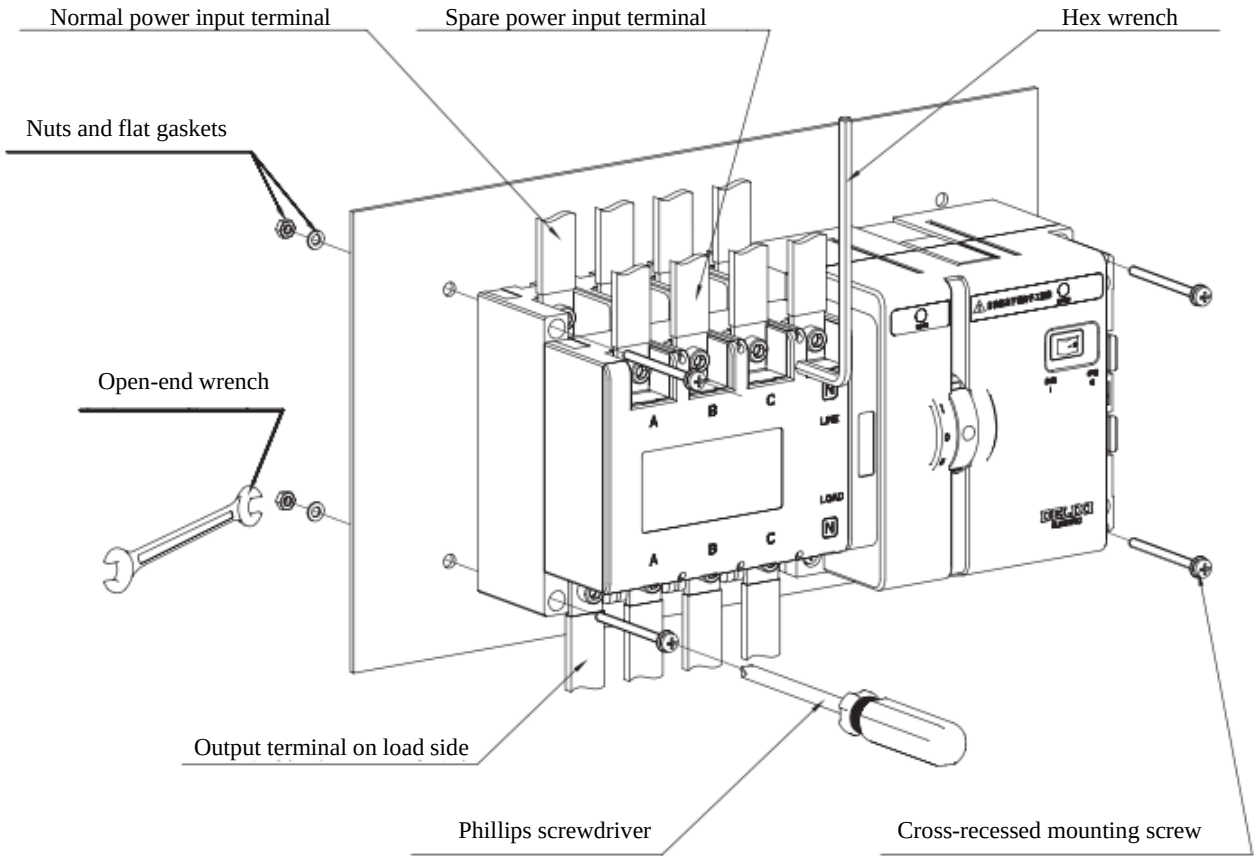

Fig. 6 CDQ0s80~250 normal power supply, spare power supply, outlet side wiring and product installation

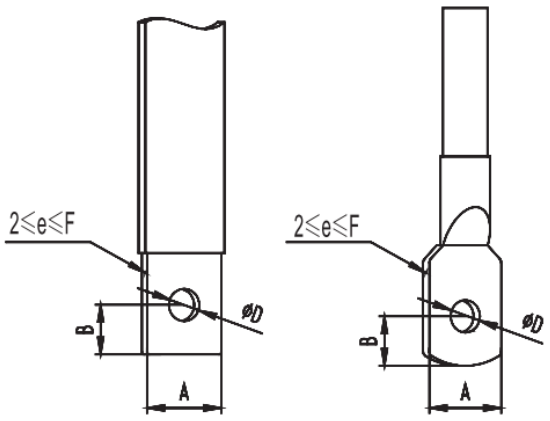

Fig. 7: Schematic diagram of copper busbar and wire specifications

Table 4 Specifications of copper busbars and wires

Spec. \ Model	A	B	D	F
CDQ0s-80	16	9	6. 5	4
CDQ0s-125	21	11	6. 5	4
CDQ0s-250	30	15	8. 5	6

s

Table 5 Connecting wire (mm^2)

Rated current A	10	16/20	25	32	40/50	63	80	100	125/140	160	200/225	250
Sectional area of wire mm^2	1. 5	2. 5	4	6	10	16	25	35	50	70	95	120

Table 6 Torque table

Frame	Hex	Torque N.m
80	M6X15	6~7
125	M6X15	
250	M8X20	9. 5~10. 5

3.5 Safety Distance

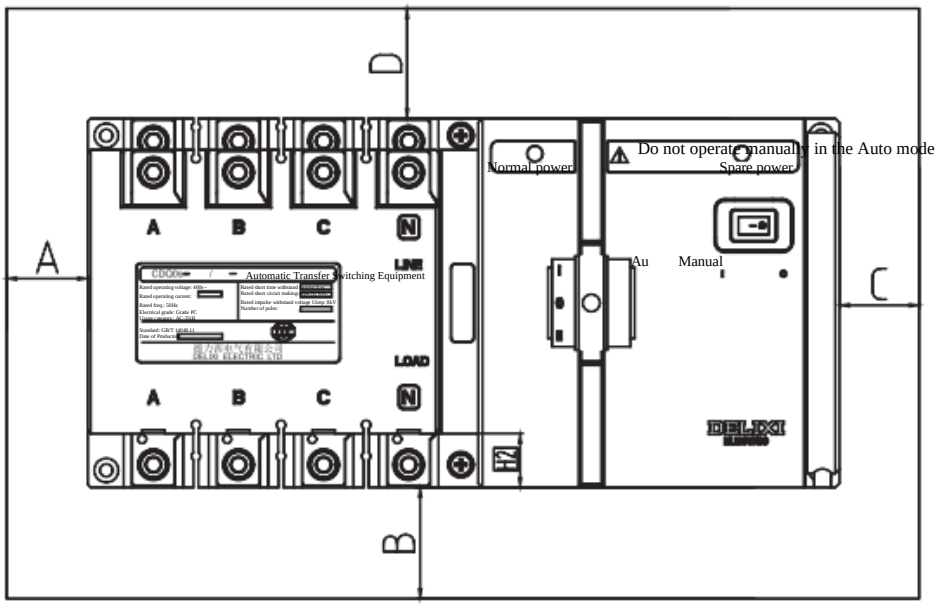

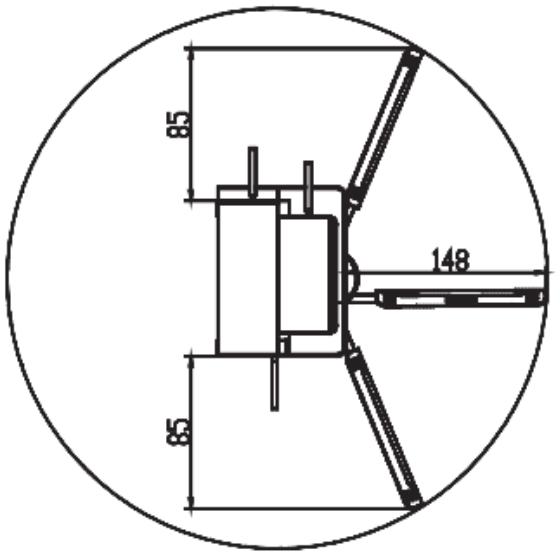

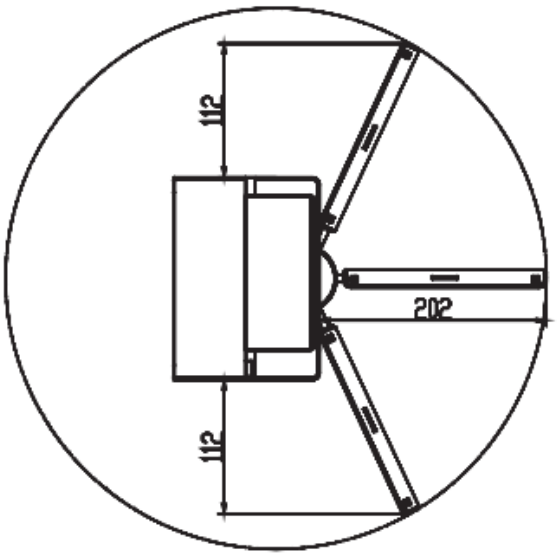

CDQ0s-80/125 CDQ0s-250

There must be no obstructions within the working range of the handle

Table 7 Safety distance (mm)

Safety distance (mm)	A	B	C	D
Insulation	0	50	0	50
Metal	0	60	0	60
Live conductor	0	60	0	60

4 Operation and Debugging

4.1 Description of Automatic Switching Action Process of Switch (automatic transfer automatic recover)

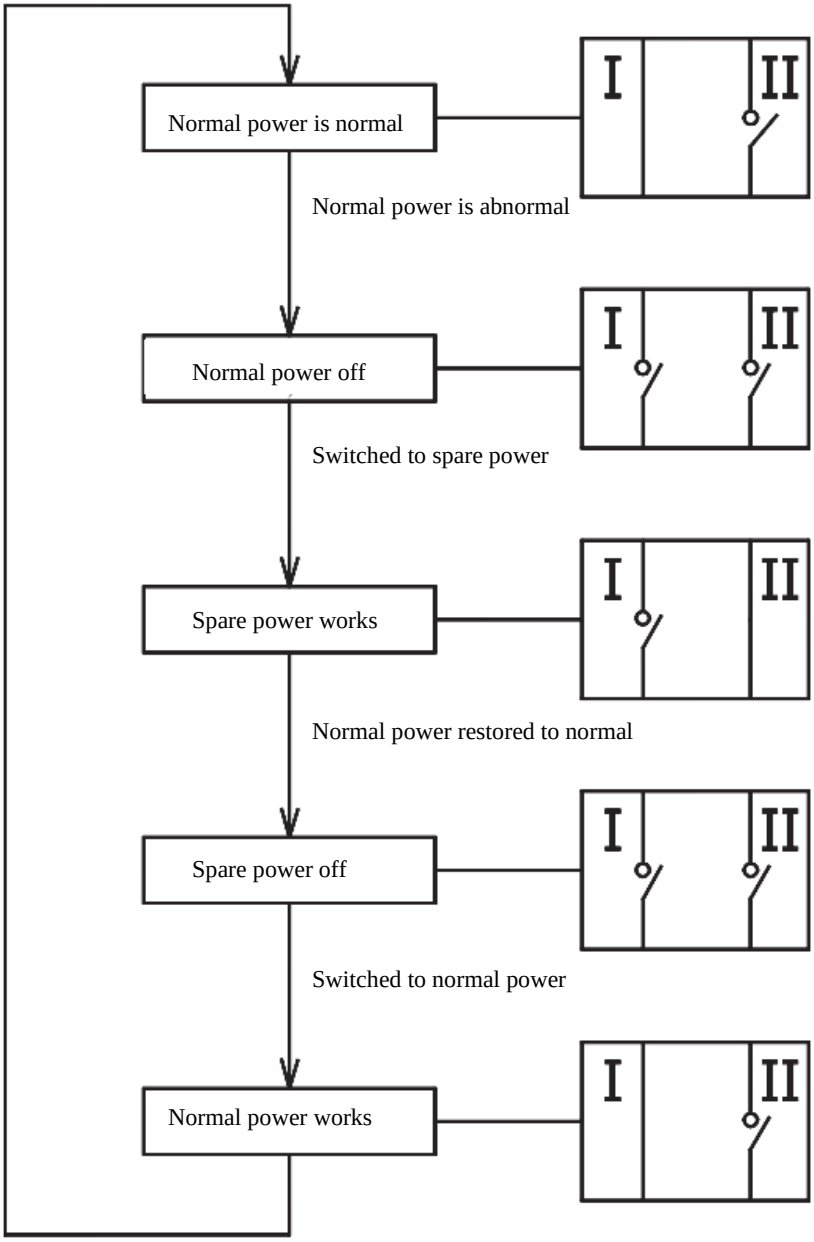

Fig. 8 Operation process flow diagram

4.2 Operation Method

a) Automatic operation: In the automatic transfer mode controlled by the controller, the controller can automatically detect the voltage loss and phase loss of the power supplies of two circuits to realize the automatic switching of the power supply.

b) Manual operation: Turning to the manual transfer mode via handle, press the [Auto/Manual button] button on the switch panel to switch to the manual mode (Auto/Manual button in O position), take out the toggle handle from the body and insert it into the handle rotation position on the body, press the handle to the bottom, and rotate it to the required power position. After operation via handle, please remove the operating handle and put it in the original position.

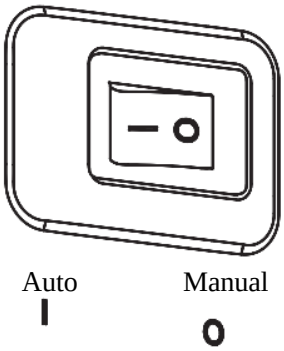

Fig. 9 Auto/Manual button diagram

4.3 Handle Installation and Use Instructions

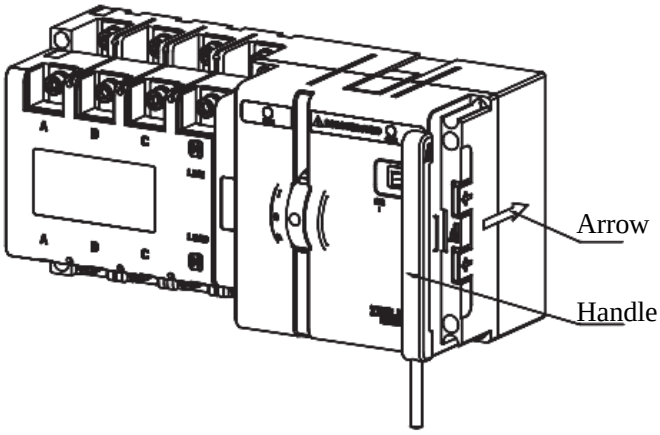

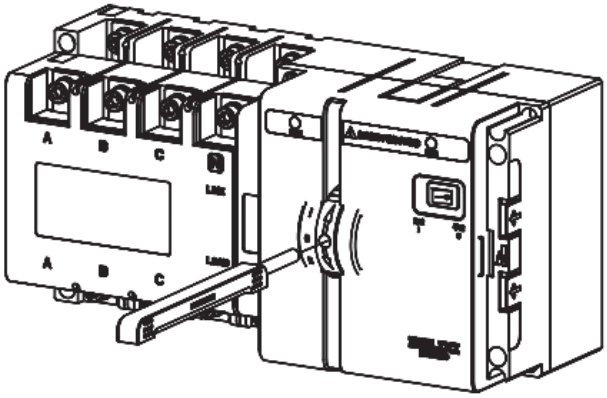

After installing and debugging the automatic transfer switching equipment, insert the handle into the product in the arrow direction, as illustrated in figure

To manually open and close the product, insert the handle into the handle wheel in the direction shown in figure, and then open and close the product back and forth in the arrow direction, as illustrated in figure

Fig. 10 Handle Installation and Use Instructions

4.4 Description of Indicator Display

The description of the indicator display sees Table 8:

Table 8 Description of indicator display

1 Common power	On: The normal power works normally Off: Voltage loss and phase loss of common power ABCN	1 Spare power	On: The spare power works normally Off: Voltage loss and phase loss of spare power AN

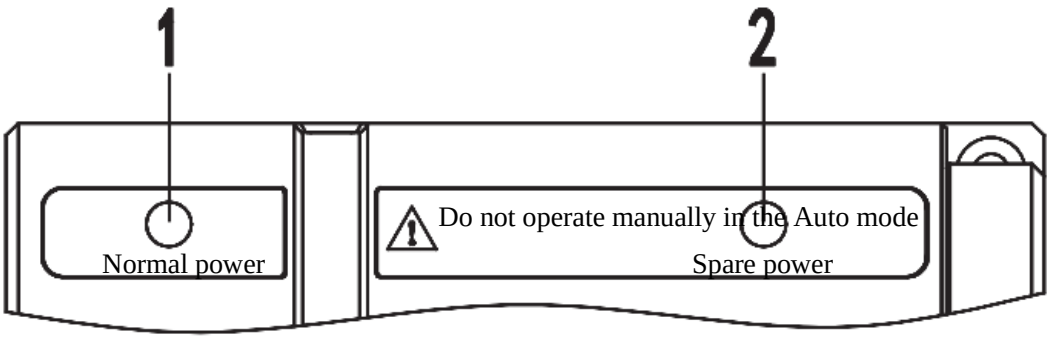

Fig. 11 Indicator position diagram

4.5 Precautions During Operation

In addition to the "Danger" and "Caution" on the Home page, the following situations should still be observed:

a) This product can be operated reliably under the rated voltage (85%~115%) Ue. When installing and wiring the product, the wire inlet and outlet and the N phase must be strictly distinguished, and the neutral line should not be shared;

b) It is strictly prohibited to use this product out of the normal use conditions, such as continuous moisture or condensation without corresponding precautions taken. For example, there is flammable or corrosive dust, the expected short circuit current is out of range, the voltage is too high or too low, the current exceeds the rated current, and the altitude is too high.

c) This product adopts plastic shell insulation design structure, and there is no earthing requirement.

d) If the protection device is disconnected due to the fault of the line or load, please eliminate the fault, and then power on the load.

e) The general inspection shall be carried out regularly (such as every three months of operation) and the power supply is switched once manually to check whether the product works normally during the operation of the product.

5 Troubleshooting

The common fault analysis of automatic transfer switching equipment is listed in Table 9:

Table 9 Troubleshooting

Fault	Cause	Solution
The product cannot be switched automatically (in case of fault or debugging)	1. There is a fault in the connection between the power line and the switch body; 2. The Auto/Manual button is in the Manual state; 3. The undervoltage of the product on site exceeds 15% (phase voltage)	1. Check whether the power line is connected properly and whether the bolts are tightened firmly; 2. Check whether the Auto/Manual button is in the Auto mode; 3. Maintain the power grid on site.

6 Company's Commitments

The free repair or replacement will be provided by the company for damage or abnormal operation of the product produced by our company due to poor manufacturing quality within 36 months from the date of the production under the premise that the user conforms to the operation and storage conditions and that the product is well sealed. A paid repair is provided when the warranty period expires. However, the paid repair is provided for damage caused by one of the following situations even within the warranty period:

a) Improper operation, maintenance, or storage;
b) Modification without permission, or improper repair;
c) Damage caused by falling off after purchase or occurred during the installation process;
d) Irresistible nature disasters such as earthquakes, fires, lightning strikes, abnormal voltages, and secondary disaster.

If you have any questions, please contact the dealer or the company's customer service department.
Customer service hotline: 400-826-8008

DELIXI
ELECTRIC
德力西电气

Certificate

DELIXI ELECTRIC LTD

Name: Automatic Transfer Switching Equipment

Model: CDQ0s

The product passes the inspection and is allowed to be shipped.

Standard: GB/T 14048.11

Inspector: Check 06

Date of production: See the label on the inner box

DELIXI ELECTRIC LTD
Delixi High-Tech Industrial Park, Liushi Town, Yueqing City, Zhejiang Province P/C.: 325604
Tel: (86-577)6177 8888
Fax: (86-577)6177 8000
Customer service hotline: 400-826-8008

www.delixi-electric.com
The first edition of this User Manual was issued in Aug. 2022.