Product overview

LD11s Series Indicator



Product Introduction

- Adopt a high-brightness and pure-color LED light-emitting chip as a light source;
- Long service life, low energy consumption and high reliability;
- Concealed terminal block for improved safety
- Bottom color ring logo, Elegant and beautiful

Selection Guide

Product model	Installation dimensions	Pressure drop mode	Voltage level	Color	Assisted identification	Environmental Code
LD11s	☐	☐	☐	☐	☐	☐
LD11s	φ16 φ22	2: Resistive (AC/DC) 4: Capacitance (AC)	T:6V J:12V B:24V C:36V E:48V F:110V M:220V Q:380V	3: Green 4: Red 5: Yellow 7: White 8: Blue	F: discharge type	Default: General R: RoHS

Note: Installation diameter φ22 and φ25 are common.

Product overview

LD11s Series Indicator

Main Technical Parameters

Characteristic \ Model			LD11s-16	LD11s-22
Insulation voltage Ui			500V	690V
Rated impulse withstand voltage Uimp			6kV	
Rated working voltage Ue		AC/DC	6V~220V	6V~380V
		AC	220V, 380V	
Rated working current Ie		AC/DC	≤20mA	
		AC		
Working life			30000h	
Working frequency			50/60Hz	
Emitting color			Green, red, yellow, white, blue	
Brightness			≥40cd/m^2	
Degree of protection (before panel installation)			IP40	
Tightening torque of screw			0.4 N•m (Max. 0.5 N•m)	0.8 N•m (Max. 1.2 N•m)
Wiring capability	Hard wire		Minimum 1 × 0.5mm^2 Maximum 2×1mm^2 or 1×1.5mm^2	Minimum 1×0.5mm^2 Maximum 2×1.5mm^2 or 1×2.5mm^2
	Flexible wire			
Environmental temperature		Operation	-25°C ~ + 55°C (the average temperature within 24h shall not exceed + 35°C)	
		Storage	-35°C~+70°C	
National Standards			GB/T14048.5	
Certification			CCC	

Product overview

LD11s Series Indicator

LD11s Series Indicator

- LD11s-16

Unit: mm

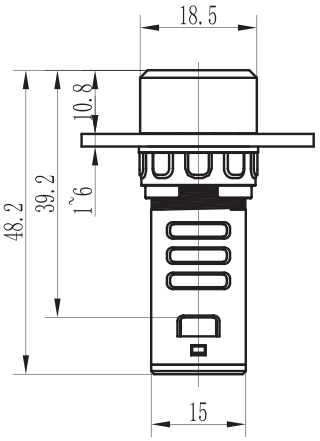

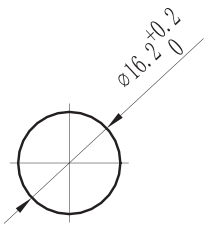

Panel opening size

- LD11s-22

Unit: mm

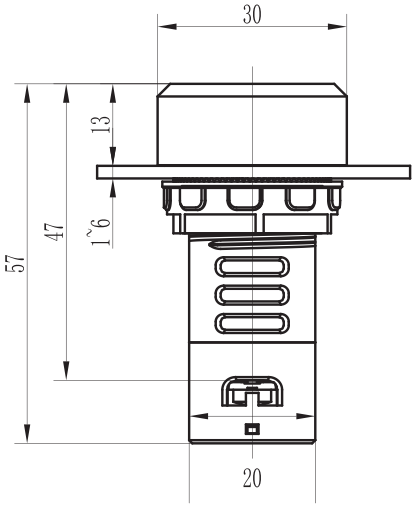

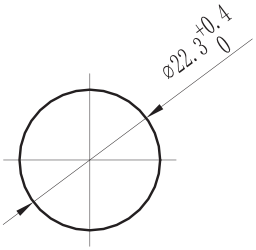

Panel opening size